MAINTENANCE SERVICE MANUAL FRG-7700

YAESU MUSEN CO., LTD.
C.P.O. BOX 1500
TOKYO, JAPAN

YAESU ELECTRONICS CORP.
P.O. BOX 49
PARAMOUNT, CALIFORNIA, 90723

CONTENTS

PREFACE

The purpose of this manual is to provide the reader with information critical to the operation and maintenance of the FRG-7700 general coverage communications receiver. Technical details are geared for maximum comprehension by the technician or owner, rather than the design engineer. To this end, the descriptions have been kept brief, while photographs and drawings are utilized liberally.

Use of this manual is entirely at the owner's risk. While we believe the material presented herein to be correct and factual, we assume no liability for damage which may occur when this manual is used as a reference.

The FRG-7700 has had an enviable service record, and we trust that you will seldom have recourse to this manual. Should reference be necessary, though, we hope and trust that the information presented will be sufficient for your service needs.

Yaesu Musen Company, Ltd.
Tokyo, Japan

SECTION 1—GENERAL

ALL MODE COMMUNICATIONS RECEIVER
FRG-7700

GENERAL DESCRIPTION

The FRG-7700 is a revolutionary communications receiver for the most demanding shortwave listener. Using an advanced frequency synthesizer, the FRG-7700 provides reception over the range 150 kHz – 29.9 MHz, with provision for reception of AM, SSB, CW, and FM stations. In the AM mode, three bandwidths are available, allowing the operator to select the IF bandwidth most appropriate for the interference level and fidelity requirements of each listening period.

Available as an option for the FRG-7700 is Yaesu's exciting memory feature, which allows the storage and recall of up to twelve discrete frequencies. This allows the operator to watch several stations with pushbutton ease, thus eliminating the considerable effort involved in tuning manually for each of several stations one wants to watch. A memory backup feature is provided for the memory unit to perserve memories when power is removed (three penlight cells required, batteries not supplied).

The FRG-7700 features high sensitivity, excellent selectivity, digital plus analog display of the operating frequency, and a built-in digital quartz clock that can be programmed to turn the receiver on and off. A snooze timer is included in the clock feature. The timer may also be used to control peripheral equipment such as a tape recorder, for unattended recording of programs you might otherwise miss because you must be away from your station.

Top performance features include a highly effective noise blanker, selectable fast/slow AGC (Automatic Gain Control) circuit, an audio filter which may be adjusted to improve interference rejection, an easy-to-read S-meter, and two RF attenuators (one fixed, one continuously adjustable) for operation under very strong signal conditions. For FM operation, a squelch control will silence the receiver until a signal is received. Convenient interface jacks for tape recorder control, audio output to an external speaker or tape recorder, receiver muting, and for listening via headphones make the FRG-7700 truly the most versatile receiver to be made available to the shortwave listeners of the world.

We recommend that this manual be read carefully prior to operating the FRG-7700. With proper care in installation and operation, this receiver will provide you with many years of trouble-free operation.

SPECIFICATIONS

Frequency Range:
150 kHz – 29.999 MHz (30 bands)

Modes:
AM, SSB (USB, LSB), CW, FM

Sensitivity:

	AM	SSB/CW	FM
0.15MHz–0.3MHz	30μV/500Ω	3μV/500Ω	–
0.3MHz–2MHz	25μV/500Ω	2μV/500Ω	–
2MHz–29.999MHz	5μV/50Ω	0.5μV/50Ω	1μV/50Ω

Selectivity:

AM W (Wide)
12 kHz (–6 dB) 25 kHz (–50 dB)
AM M (Medium)
6 kHz (–6 dB) 15 kHz (–50 dB)
AM N (Narrow)
2.7 kHz (–6 dB) 8 kHz (–50 dB)
SSB/CW
2.7 kHz (–6 dB) 8 kHz (–50 dB)
FM
15 kHz (–6 dB) 30 kHz (–40 dB)

Stability:
Less than ±1 kHz from 1 to 30 minutes after power ON.
Less than ±300 Hz after 30 minutes warm-up.

Antenna Impedance:
0.15 MHz – 2 MHz BC 500 ohms (unbalanced)
2 MHz – 29.999 MHz, SW/BC 50 ohms (unbalanced)

Audio Output:
1.5 Watts (8 ohms, 10% THD)

Speaker Impedance:
8 ohms
4-16 ohms for external speaker or headphone

Power Requirement:
100/120/220/240 volts, AC 50/60 Hz

Power Consumption:

		With Memory Unit
Standby:	AC 10 VA	AC 10 VA
ON:	AC 33 VA	AC 39 VA

Size:
334(W) x 129(H) x 225(D) mm

Weight:
Approx. 6 kg
6.5 kg (with Memory Unit)

SEMICONDUCTOR COMPLEMENT

ICs:

HD10551P	2
MB8718	1
MB84040B	1
MC4044P	1
MC14024BCP	2
MC14046BCP	1
MC14069UBCP	1
MC14504BCP	1
MC14518BCP	2
MC14555BCP	1
MC14556BCP	1
MSM4023RS	1
MSM5524RS	1
μPB553C	1
μPC575C2F	1
μPD5101LC	6
μPC78L05A	1
SN16913P	3
SN74LS123	1
SN74LS192	4
SN74LS196	1
SN74LS290	1
SN74LS293	1
TA7061AP	1

FETs:

2SK107-3	2
2SK125	4
3SK73GR	8

Transistors:

2SA733AQ	17
2SC535A	1
2SC900E	4
2SC945AQ	70
2SC1047C	1
2SC1317R	1
2SC1384R	3
2SC1393L	2
2SC1674L	4
2SC1959Y	1
2SD288K	1
2SD882Q	3
MPS-A13	1

Diodes:

1N60	10
1S188FM	4
1SS53	64
10D1	1
FC52M	2
FC63	1
MV104	5
RD4.7EB2	1
RD5.6EB2	4
RD7.5EB1	1
RD9.1EB2	1
RD10EB1	1
S2V10	1
S2VB10F	1

LEDs:

TLG-208	1
TLY-205	2
TLY-208	1

* Including Memory Unit

Specifications subject to change without notice or obligation

ACCESSORIES

The following accessories are packaged along with the FRG-7700:

(1) AC Power Cable (T9013280) 1 ea.

(2) Extra fuses 100-120V 1A (Q0000002)
220-240V 0.5A (Q0000001)
2 ea.

(3) Wire for antenna (Q3000004) 10 m.

(4) Extender feet with pads (R3054620) 2 ea.

AVAILABLE OPTIONS

(1) Memory Unit

(2) Memory/Clock Backup Batteries (AA Size)

NOTE

In this manual, discussion of the memory feature will omit repetitive use of the word "option," in the interest of brevity. The standard FRG-7700 does not include the memory unit, which is available as an extra-cost option from your Yaesu dealer. The AA size penlight cells required to activate the memory backup feature are not supplied with the memory unit.

RECOMMENDED ACCESSORIES

The FRV-7700 is a high-performance crystal controlled VHF frequency converter, designed to match the FRG-7700 general coverage communications receiver. The three 10 MHz ranges on the VHF band are converted into 20★(18) – 30 MHz, allowing you to receive these frequencies with your FRG-7700.

The tunable high-Q resonators in both RF and IF sections eliminate most intermodulation and cross modulation problems, providing excellent receiver performance when working with weak signals.

The FRT-7700 is an ultra-compact antenna tuner for the FRG-7700 receiver. Designed for operation from 150 kHz to 30 MHz, the FRT-7700 will provide the proper impedance for the receiver, thus rejecting unwanted signals. A built-in attenuator, 60 dB maximum, prevents intermodulation and cross-modulation from occurring when strong signals are being carried to your receiver. Also, a two-section lowpass filter aids in the rejection of interference from strong signals above 2 MHz, when you are listening to bands in the 150 kHz to 500 kHz range.

FRV-7700 SPECIFICATIONS

Frequency coverage:

Model A – ★118 – 130 MHz; 130 – 140 MHz; 140 – 150 MHz

Model B – ★118 – 130 MHz; 140 – 150 MHz; 50 – 59 MHz

Model C – 140 – 150 MHz; 150 – 160 MHz; 160 – 170 MHz

Model D – ★118 – 130 MHz; 140 – 150 MHz; 70 – 80 MHz

Model E – 140 – 150 MHz; 150 – 160 MHz; ★118 – 130 MHz

Model F – 150 – 160 MHz; 160 – 170 MHz; ★118 – 130 MHz

Sensitivity: (measured w/FRG-7700)

AM (M) – 2.5 μV for 10 dB S/N @ 1 kHz 30% MOD

AM (N) – 2.0 μV for 10 dB S/N @ 1 kHz 30% MOD

SSB/CW – 0.5 μV for 10 dB S/N

FM – 0.5 μV for 10 dB S/N @ 3.5 kHz Dev.

Size:

32(H) x 167(W) x 170(D) mm

Weight:

Approximately 800 g.

FRV-7700

FRT-7700

The FF-5 LF Filter can reject signals above 500 kHz, thus preventing cross-modulation and intermodulation caused by strong broadcasting stations above 500 kHz. The installation of this filter onto your FRG-7700 can be done using the mounting bracket supplied.

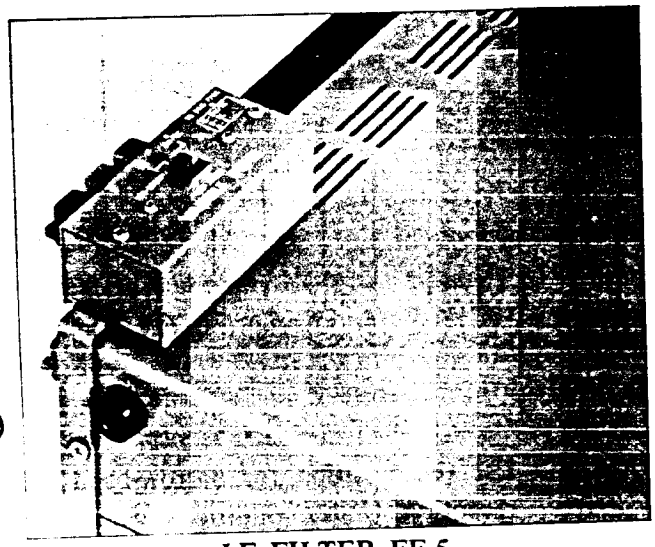

LF FILTER FF-5

The YH-55 and YH-77 headphones are light in weight, and an extra-soft cushion makes for many hours of comfort. The audio response is shaped to match that of your receiver.

YH-55

YH-77

FRA-7700 ACTIVE ANTENNA

This active antenna unit is designed for use with the FRG-7700 general coverage receiver, allowing good quality reception of signals while using only the attached 1.2 meter telescoping antenna. The active antenna unit includes an RF preamplifier useful over the entire 150 kHz to 30 MHz range of the FRG-7700. Its gain is adjustable from the front panel allowing precise setting for optimum performance under a wide variety of reception situations.

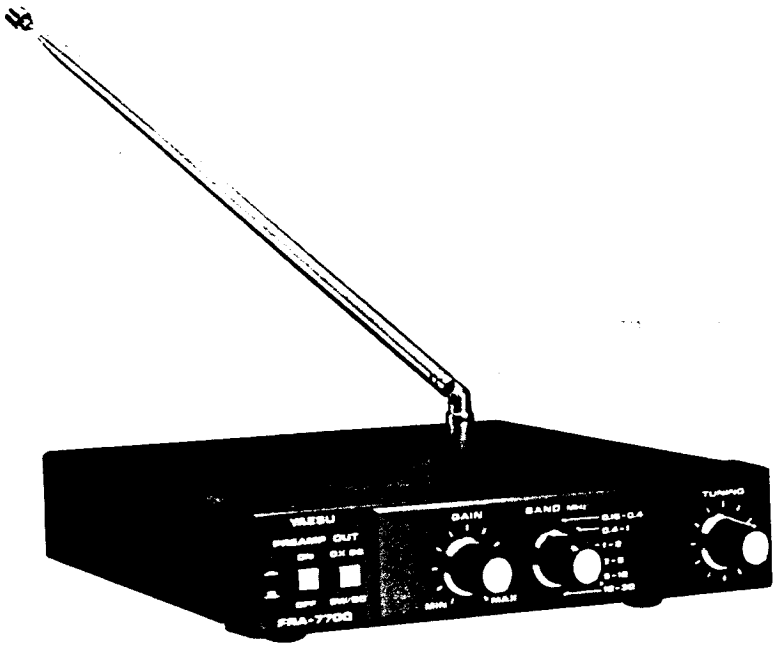

FRA-7700

CONTROLS AND SWITCHES

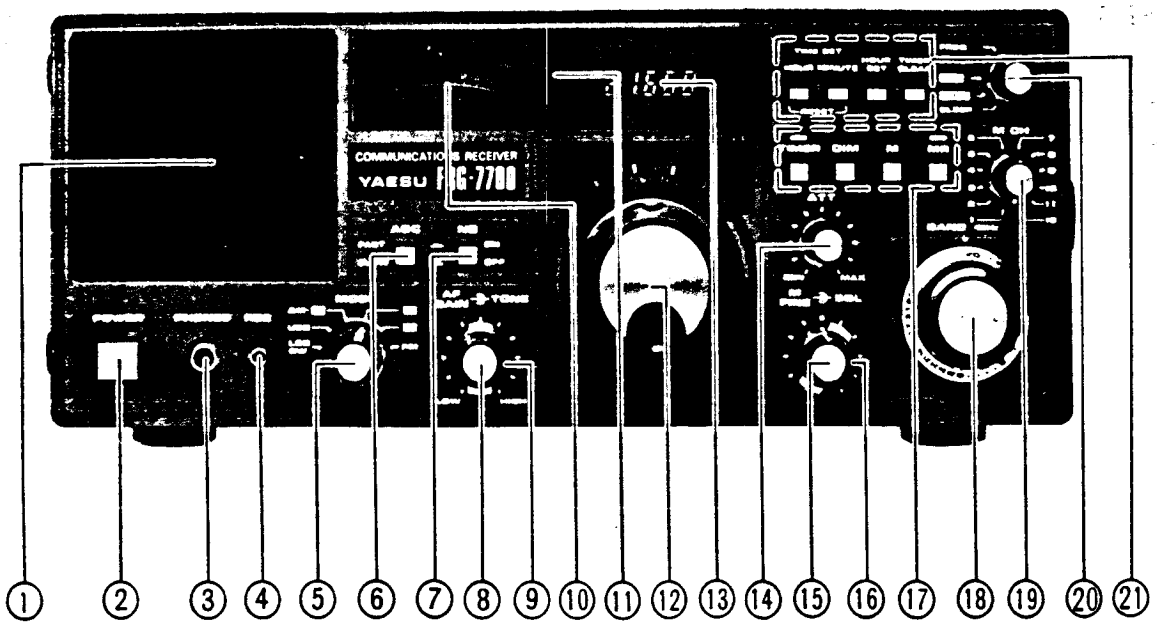

FRONT PANEL

(1) SPEAKER

Internal speaker

(2) POWER

This is the main ON/OFF switch for the receiver. When the POWER switch is in the OFF position, on/off control may be exercised by the clock timer. See the "Operation" section for details.

(3) PHONES

This is a standard 1/4" headphone jack. When the headphone plug is inserted into this jack, the internal speaker is automatically cut off. The audio output impedance is 8 ohms.

(4) REC

This miniature phone jack is for recording purposes. The output level is approximately 100 mV (fixed), irrespective of the setting of the AF GAIN control.

(5) MODE

This control chooses the desired mode:

LSB/CW Use this position for lower sideband (LSB) and Morse Code (CW) reception.

USB Use this position for upper sideband (USB) reception. This position may also be used for CW reception, if desired.

AM N Use this position for narrow-band AM reception. Under conditions of extremely heavy adjacent frequency interference, this position of the mode switch may allow AM reception where a wider mode would be unusable. There will be some degradation in fidelity in the AM N position, however.

AM M For all-around AM reception, the AM M position of the mode switch may be used. Because of the wider bandwidth, the fidelity on the incoming signal is much better than with the AM N filter.

AM W Under clear band conditions, the AM W provides the widest bandwidth and best fidelity.

FM This position selects reception of FM signals.

(6) AGC

This switch allows selection of the optimum AGC (Automatic Gain Control) decay time. The SLOW position is normally used for AM reception, while the FAST position is normally chosen for Morse Code (CW) reception. For SSB reception, the optimum position is determined by band conditions and the adjacent-frequency interference level.

(7) NB

This switch, when pressed, activates the noise blanker for reduction in the level of interfering pulse-type noise.

(8) AF GAIN

The AF GAIN control varies the volume level from the speaker. Clockwise rotation increases the volume level.

(9) TONE

This control varies the high-frequency audio response. The variation in audio fidelity provided by the TONE control is highly useful in minimizing interference from heterodynes and other high-pitched noises that might ruin reception.

(10) S-METER

The S-meter provides a relative indication of the signal strength on the incoming signal. The upper scale is calibrated in S-units from S1 to S9, with stronger signals indicated in dB over S9. The lower scale is calibrated in S-units compatible with the SINPO code, as shown in Table 1.

(11) AM, PM

These are AM and PM indicators for the clock.

(12) MAIN DIAL

The main dial determines the operating frequency of the FRG-7700, in conjunction with the setting of the BAND switch.

(13) DIGITAL DISPLAY

The digital display indicates the operating frequency as well as the time. Selection of display of the frequency or time is made via the FUNCTION switch.

(14) ATT

The ATT (Attenuator) control, when rotated in a clockwise direction, reduces the gain of the receiver preamplifier, thus minimizing overloading of the receiver during conditions of extremely strong adjacent-frequency interference. Maximum receiver sensitivity occurs when the ATT control is rotated to the fully counterclockwise position.

(15) M FINE

This control allows fine tuning during memory operation. A frequency excursion of up to 1 kHz may be achieved using this control.

(16) SQL

The SQL (Squelch) control will silence the receiver until a signal is received. The SQL control is usable ONLY in the FM mode.

(17) CONTROL SWITCHES (TIMER, DIM, M, MR)

TIMER — Once the desired on/off timers are programmed into the clock, push this switch to activate the power control timer. In this mode, the digital clock timer will turn the receiver on and off.

DIM — This button, when pushed, will allow dimming of the meter lamp, the dial lamps, and the display intensity.

M — Push this button to store a frequency into memory.

MR — This button, when pushed, transfers frequency control from the main dial to the memory system. Push the button again to return to main dial tuning.

(18) BAND

This switch selects the desired 1 MHz segment within the HF spectrum, with calibrations from 0 MHz to 29 MHz. Also provided are preset marks for the HF amateur radio (ham) bands.

(19) M CH

This switch selects the desired memory channel.

(20) FUNCTION

This switch selects the Digital Display functions.

FREQ — All digits of the operating frequency are displayed with resolution to 1 kHz.

CLOCK — Time is displayed in a 12-hour format.

ON — The ON time, at which the receiver will be turned on, is displayed.

OFF — The OFF time, at which the receiver will be turned off, is displayed.

SLEEP — The remaining time of the sleep timer is displayed.

(Up to 59 minutes can be set for the sleep timer.)

(21) CLOCK SETTING SWITCHES

HOUR — This switch is used for setting hours on the clock and timer. Pressing this switch once will advance the reading by one hour. If this switch is held for more than two seconds, the hour reading will advance continuously.

MINUTE This switch is used for setting minutes. The setting procedure is identical to that for setting hours.

HOUR SET

This switch, when pressed, resets the minute and second digits of the clock to zero. For example, if more than 30 minutes are displayed on the clock, pressing the HOUR SET button will advance the clock to the next hour. If less than 30 minutes have elapsed in the hour, pressing the HOUR SET button will zero the minutes and seconds, but leave the hour reading unchanged. This feature facilitates easy time setting.

TIMER CLEAR

This switch, when pressed, clears the remaining time before the programmed off time. After the timer turns the receiver on in the TIMER mode, you may push the TIMER CLEAR button to turn the receiver off. The following day, the receiver will turn ON again at the programmed time. In the sleep timer mode, pushing this switch will cause the remaining time to be zero, and the receiver will turn off.

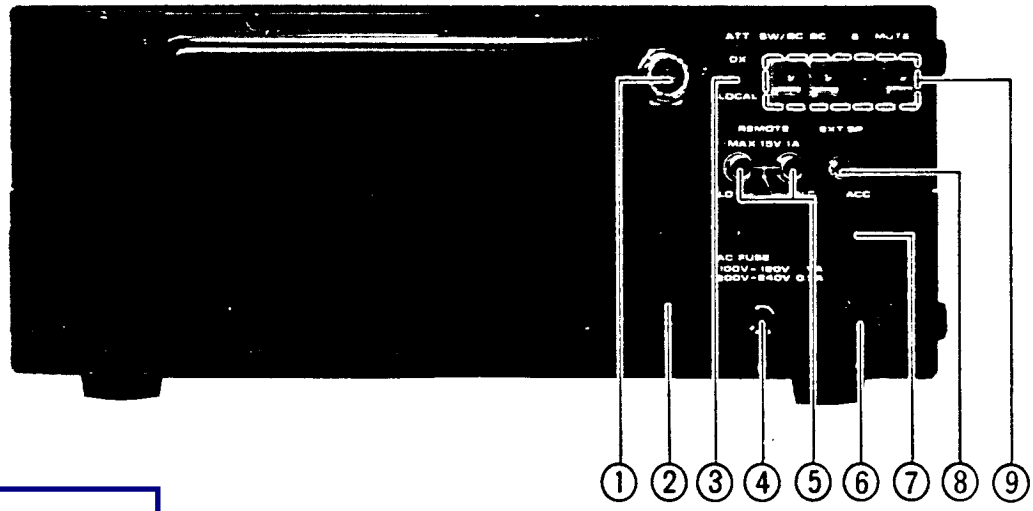

REAR PANEL

(1) COAX ANT

This is a standard UHF type coaxial connector for shortwave and standard broadcast listening. This connector is wired in parallel with the SW/BC terminals.

(2) AC

The AC power cable should be connected at this point.

(3) ATT

The ATT (Attenuator) switch activates an attenuator in the incoming signal path when the LOCAL position is selected. For best receiver sensitivity, this switch should be placed in the DX position.

(4) AC LINE FUSE

For 100/120 volt operation, a 1 amp fuse should be installed here. For 200/240 volt operation, a 1/2 amp fuse should be installed here. When replacing fuses, be absolutely certain to use a fuse of the proper rating, as our warranty does not cover damage caused by use of an improper fuse.

(5) REMOTE (N.O./N.C.)

These RCA type jacks may be used for control of peripheral equipment such as tape recorders, etc. When the TIMER switch is activated, and the ON time is reached, the internal switching relay is activated. When the OFF time is reached, the relay returns to its normal condition. The normally open and normally closed jacks on the rear panel may then be used, according to the control requirements of your station equipment. See the "Operation" section for details.

(6) AC VOLTAGE SELECTOR

This is for selection of the proper input AC voltage. Set this selector for your local line voltage. If you have any question about your local line voltage, consult your local Yaesu dealer before attempting operation of this equipment.

(7) ACC

This is a 5 pin DIN accessory jack which affords access to AGC voltage, an 11 volt DC line, and the mute line.

(8) EXT SP

An external speaker may be connected via this jack. The audio output impedance is 4-16 ohms. Insertion of a plug into this jack automatically cuts off the internal speaker.

(9) SW/BC, BC, E, MUTE

SW/BC is for connection to a long wire antenna for both shortwave and broadcast listening.

BC is for connection to a long wire antenna for broadcast band listening.

E is a ground connection.

MUTE provides a means of muting the FRG-7700 (an external standby switch). Shorting the MUTE terminal to ground will mute the receiver.

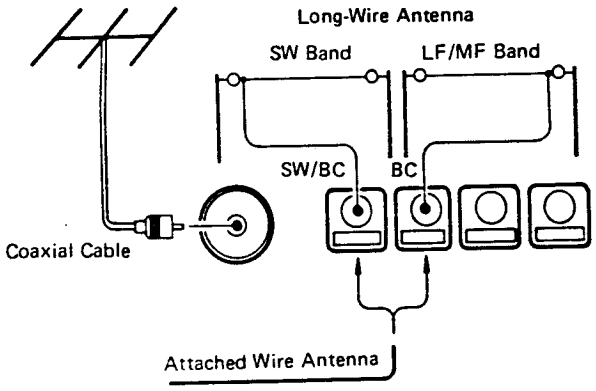

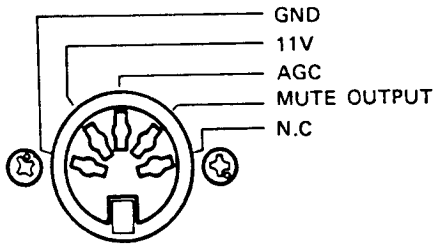

ACC CONNECTIONS

SINPO CODE

	Signal Strength S	Degrading Effect of Interference I	Noise N	Propagation Disturbance P	Overall Rating O
5	Excellent ✱ (60dB)	Nil ◉ (−40dB)	Nil (−40dB)	Nil ○ (0dB)	Excellent
4	Good (45dB)	Slight (−30dB)	Slight (−30dB)	Slight (10dB)	Good
3	Fair (30dB)	Moderate (−20dB)	Moderate (−20dB)	Moderate (20dB)	Fair
2	Poor (15dB)	Severe (−10dB)	Severe (−10dB)	Severe (30dB)	Poor
1	Barely Audible (0dB)	Extreme (0dB)	Extreme (0dB)	Extreme (40dB)	Unusable

Table 1

✱ RECEIVER INPUT LEVEL
◉ RATIO TO SIGNAL
○ DEPTH OF FADING, ECHO, ETC.

INSTALLATION

Best performance from this equipment can only be obtained if proper care is observed during installation. While the setup procedure for the FRG-7700 is extremely straightforward, permanent damage to the set can occur if improper voltage is applied to the unit or if external connections are improperly made. Before attempting operation of your FRG-7700, be certain to read the following sections carefully.

UNPACKING AND INITIAL INSPECTION

Carefully remove the FRG-7700 from its carton, and inspect it for any signs of physical damage. Rotate the knobs and push the switches, checking each for normal freedom of action. Should any damage be observed, document it carefully, and notify the shipping company immediately. Save the carton and foam packing material for possible use at a later date.

AC VOLTAGE SELECTION

Your FRG-7700 is supplied with a power transformer capable of operation from 100, 120, 220, or 240 volts, as these voltages are the ones most commonly used throughout the world. Your Yaesu dealer has taken care to make sure that your radio is set up for the voltage used in your area. However, in some parts of the world, more than one voltage is available for use. It is extremely important that the FRG-7700 not be subjected to an improper supply voltage.

Therefore, before connecting the power cord to the radio, make absolutely certain that the voltage specification marked on the rear panel of your receiver (lower right-hand corner) matches your local supply voltage. At the same time, check to make certain that a fuse of the proper rating is installed. For 100/120 volt operation, use a 1 amp fuse. For 220/240 volt operation, use a 1/2 amp fuse. The fuse holder is located on the rear panel. NEVER remove the fuse holder when the power cord is plugged into the wall outlet.

CAUTION

Be certain to observe the above precautions regarding power connections and fuses. Our warranty does not cover damage caused by improper supply voltage nor damage caused by use of an improper fuse.

To set the radio up for operation on a different voltage (as, for example, should you move from Europe to the United States), proceed as follows:

(1) Disconnect the power cord from the rear of the FRG-7700.

(2) Remove the label covering the voltage selector control on the rear panel of the receiver.

(3) Insert a screwdriver into the slot on the voltage selector. Rotate the selector until the proper voltage is at the very bottom of the selector, in line with the pointer.

(4) If a change is made from 100/120 volts to 220/240 volts, or vice versa, be certain that you install a fuse of the proper rating. For 100/120 volts, use a 1 amp fuse, and for 220/240 volts, use a 1/2 amp fuse.

(5) Make a small label to indicate the new voltage specification for the receiver, and secure it over the voltage selector.

(6) Connect the power cord to the rear panel "AC" jack, and plug the power plug into your wall outlet.

(7) If you have any doubt about your local supply voltage, ask your Yaesu dealer. Improper supply voltage must not be applied to this instrument.

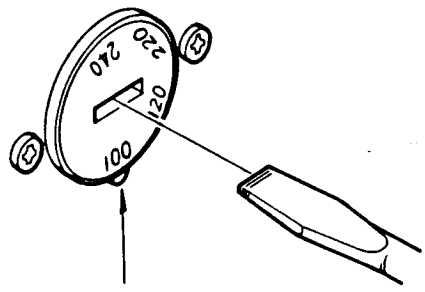

AC VOLTAGE SELECTOR

BACKUP BATTERY INSTALLATION

Memory-equipped FRG-7700 receivers include a backup feature which will hold the memory even when the unit is unplugged from the supply voltage. The backup feature requires three AA size penlight cells (not supplied), which should be installed as shown in Figure 1. Be absolutely certain to observe the proper polarity of the batteries during installation.

Battery consumption is extremely low, but we recommend that the backup batteries be replaced once per year. If you have not used the FRG-7700 for a long time, we recommend that you inspect the penlight cells to ensure that no leakage from the batteries has occurred. Damage caused by battery leakage or improper battery polarity is not covered by our warranty.

Figure 1

GROUND CONNECTION

For best performance and safety, the FRG-7700 should be connected to a good earth ground. The ground lead should be a heavy-gauge braided cable or wire, and should be connected to the terminal marked "E" on the rear panel of the receiver.

ANTENNA INSTALLATION

The antenna is an important part of your station installation. Without a good antenna system, it will be difficult for you to take full advantage of your FRG-7700 receiver's many high-performance features. For best reception, please follow the guidelines presented below regarding antenna installation.

(1) Low Frequency (LF) and Medium Frequency (MF) Reception (Below 2 MHz Exclusively)

Good all-around reception will occur if a single long wire is connected to the BC terminal on the rear of the receiver. Insulate the wire at the far end, and at the point where it enters your house; ceramic insulators suitable for antenna installations are available from your Yaesu dealer. The wire itself may be either bare or insulated (plastic or vinyl covering on the wire), with the constraint that bare wire should not come in contact with trees or other obstructions.

In general, the antenna wire should be as long, high, and in the clear as possible. If these simple recommendations are followed, good reception will be easy to obtain.

(2) Shortwave (SW) Reception (Above 2 MHz Exclusively)

Maximum performance is secured in the shortwave bands through the use of a resonant antenna having an impedance of 50 ohms at the design frequency. A center-fed "dipole" antenna cut for the most-listened-to frequency will easily satisfy this requirement. Dipole antennas should be fed with coaxial cable, and suitable antenna kits are available from your Yaesu dealer.

However, the shortwave bands are quite wide, and no dipole antenna will be resonant throughout this entire frequency range. The best course of action, then, is to cut the legs of the dipole antenna to the longest (equal) lengths that your installation area will allow. This will provide an excellent listening system for your shortwave station.

Should you wish to cut your dipole antenna for optimum performance on a particular shortwave band, the formulas of interest are:

Length (feet) = 468/frequency (MHz)
Length (meters) = 142.5/frequency (MHz)

Notes Regarding Antenna Installations

For general reception (listening on both the LF/MF and shortwave bands), the antenna connection should be made to the SW/BC connector or to the coaxial antenna connector on the rear panel. If your primary interest is only on the LF/MF bands, then connect your antenna wire to the BC terminal. Do not connect one antenna to the SW/BC terminal (or coax connector) and another antenna to the BC connector at the same time; if you do, overloading or intermodulation distortion may be created, degrading receiver performance.

Use extreme caution when installing your antenna system. Every year, several people are electrocuted because their antenna touched a high-voltage wire providing their normal house current. It is extremely important that your shortwave antenna be located such that it cannot possibly come in contact with electric wires even in a disasterous windstorm.

REMOTE TERMINAL CONNECTIONS

The REMOTE terminals are connected to a relay, which is an electronically controlled switch. In the case of the FRG-7700, the switching relay is controlled by the clock timer, allowing you to control the operation of a tape recorder or other equipment simply by the proper setting of your FRG-7700 clock controls. The "N.O." terminal is "normally open," which means that the relay will cause no connection to be made from the center pin to ground until the timer activates the relay. The "N.C." terminal is "normally closed," which means that the relay contacts will cause a connection to be made between center pin and ground until the relay is activated; the relay will then open the connection.

Most tape recorders have a "footswitch" connection which allows external control. In some cases, this external on/off control line is incorporated into the microphone cord. Closing an external switch then allows the tape recorder to be turned on. To use this kind of tape recorder with the FRG-7700, connect a shielded cable from the tape recorder footswitch jack to the FRG-7700 "N.O." jack, and connect a shielded cable from the FRG-7700 "REC" jack on the front panel to the tape recorder "LINE IN" or "MIC" jack, depending on the levels accepted by your tape recorder. Remember that the REC jack on the FRG-7700 is not controlled by the AF GAIN control, but the EXT SP jack is: you may want to connect your audio input line differently for your particular requirements.

Details of the operation of the timer are included in the "Operation" section of this manual. Table 2 indicates the position of the relay contacts tied to the REMOTE terminal.

MUTE CONNECTION

When the FRG-7700 is used in conjunction with a transmitter, the MUTE terminal on the rear panel may be used to silence the receiver when transmitting. Do not forget to use a relay for external antenna switching between the receiver and transmitter. Shorting the MUTE terminal to ground will cause the receiver to be silenced.

TIMER FUNCTION	N.O. Terminal			N.C. Terminal			FRG-7700 (with POWER SW OFF)
ON TIMER	OPEN	→	CLOSED	CLOSED	→	OPEN	ON at the programmed time
OFF TIMER	CLOSED	→	OPEN	OPEN	→	CLOSED	OFF at the programmed time
SLEEP TIMER	OPEN	→	CLOSED	CLOSED	→	OPEN	OFF after the programmed period of time

→ When the timer is activated

Table 2

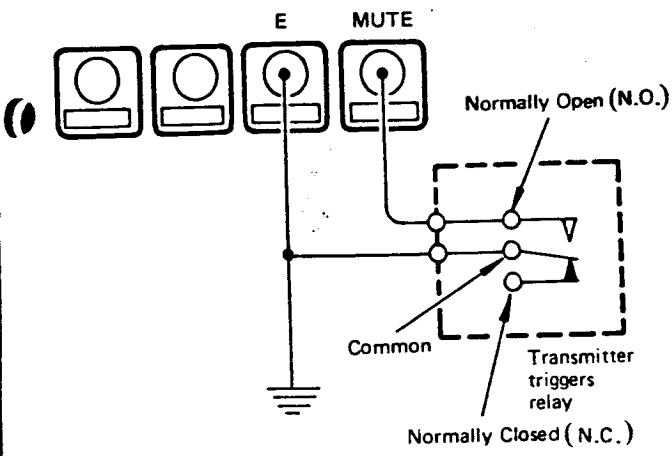

PHYSICAL LOCATION OF THE FRG-7700

The FRG-7700 will perform well in any location that allows free passage of air around the cabinet. Solid state equipment such as the FRG-7700 should not, however, be used in extremely hot environments unless some provision is made (external fan, etc.) for keeping the station temperature less than 40°C.

INTERCONNECTION WITH YR-901 MORSE CODE/TELETYPE READER

The YR-901 is a high-performance computerized translator which will allow display on a video monitor of incoming Morse Code and/or teletype (RTTY) signals. The YR-901 and YVM-1 Video Monitor are options available from your Yaesu dealer.

Complete operation instructions are included with the YR-901. Please refer to the drawing below for details of the extremely simple interconnections required. Please note that the SP-901 speaker is not mandatory for use with the YR-901, as the latter includes a built-in speaker.

The YR-901 will allow you to see for yourself late-breaking teletype news as it comes from abroad on circuits used by the international news services. Amateur radio Morse Code and teletype communications, and a host of other exotic transmissions will unfold before you on the video screen. See your Yaesu dealer for details.

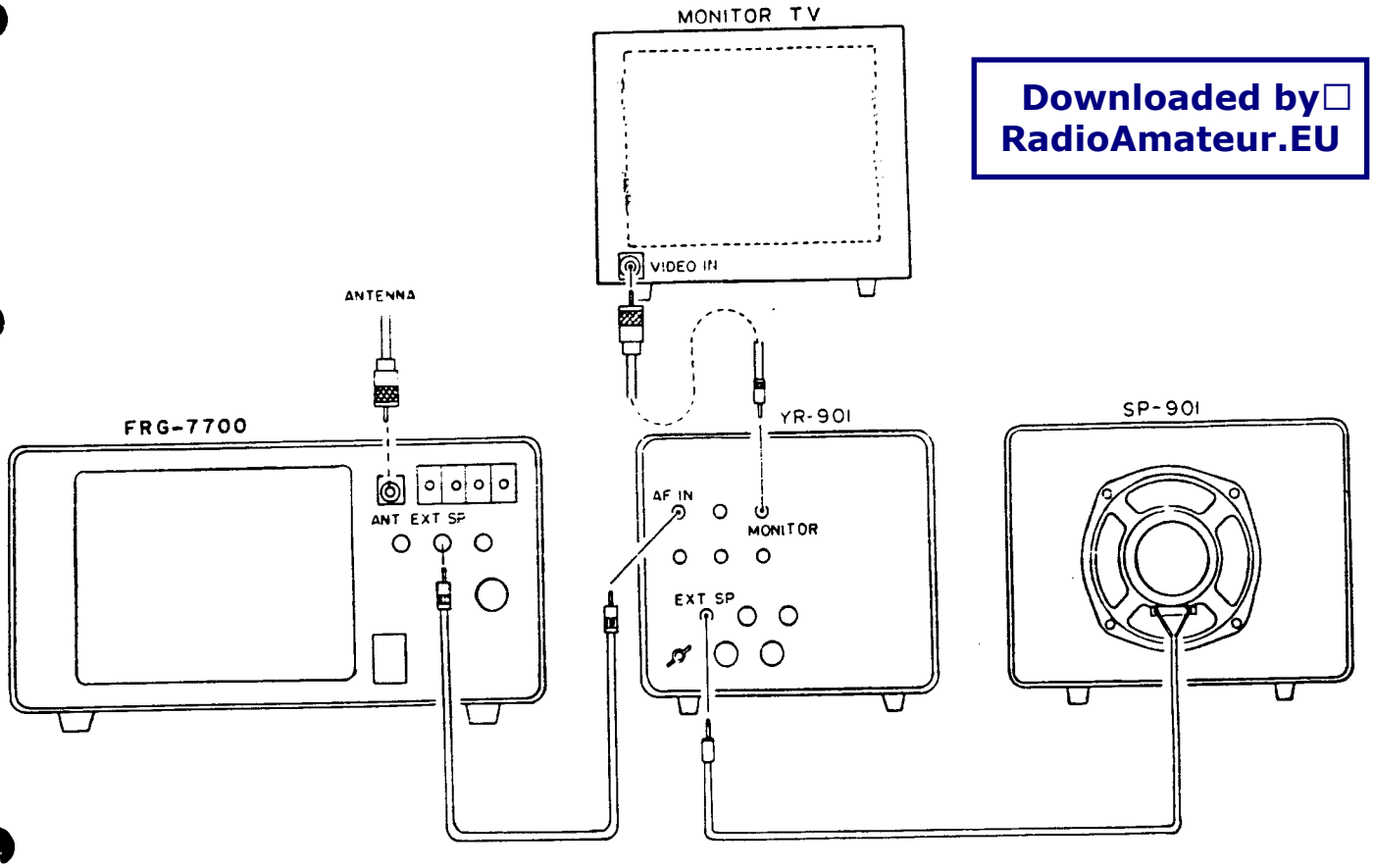

FRG-7700/YR-901/YVM-1/SP-901

MEMORY UNIT INSTALLATION

The optional Memory Unit is easily installed in a matter of minutes. Please follow the below instructions carefully, in order to make the proper connections.

(1) Remove the small cover from the rear panel of the receiver, as shown in Fig. 2.

(2) Connect the six plugs which are fastened to the cover to the appropriate jacks on the Memory Unit, as shown in Fig. 3.

(3) Mount the Memory Unit with the supplied self-tapping screws (4 pcs), as shown in Fig. 4, being sure that no wires from inside the unit are protruding.

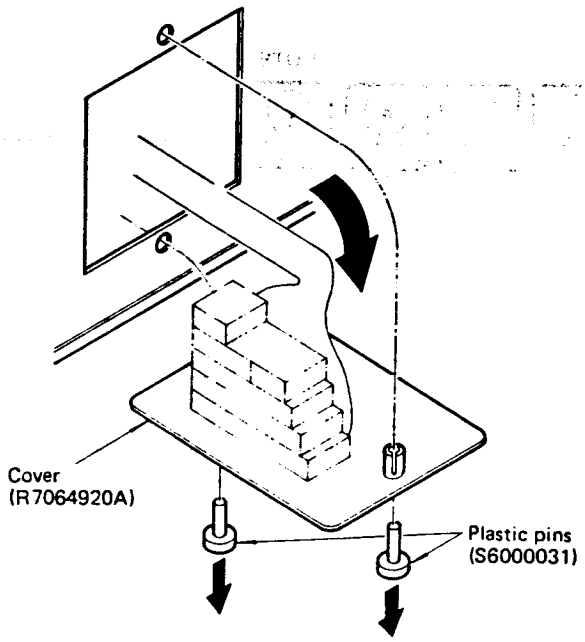

Figure 2

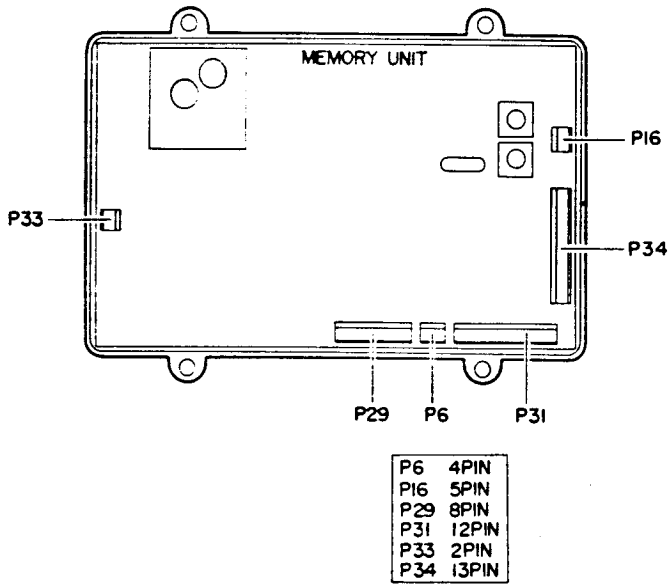

Figure 3

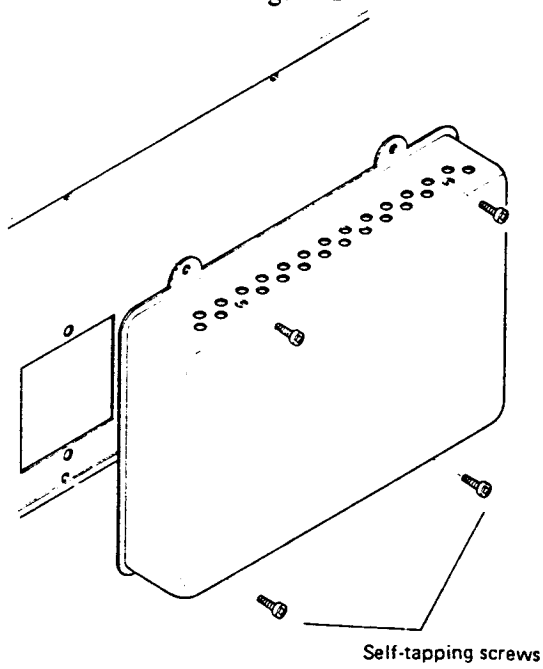

Figure 4

BOTTOM PANEL FEET

The feet on the bottom of the receiver may be changed, should you desire to change the viewing angle for the FRG-7700. The extender feet, packed in the accessory kit for the receiver, may be installed at the front or back, depending on the viewing angle desired. When repacking the receiver for shipping, be certain to replace the original feet. Refer to Figure 5 for mounting details for the bottom panel feet.

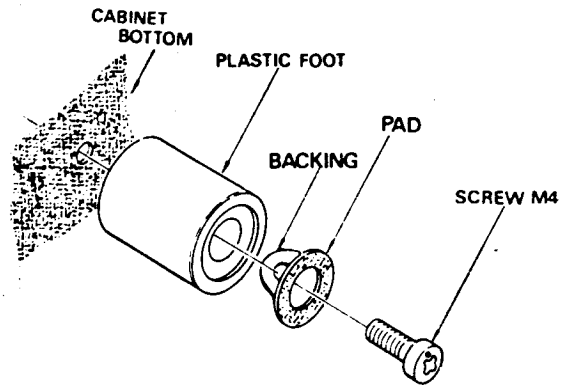

Figure 5

FF-5 INSTALLATION PROCEDURE

When connecting the FF-5 to your FRG-7700, proceed using the following installation procedure.

1. Remove the two feet mounted on the connector side of the FF-5.

2. Referring to Figure 1, fix the supplied mounting bracket to the FF-5 with the screws removed in Step 1.

3. Remove the two screws on the left, rear side of the cabinet, and secure the mounting bracket of the FF-5 in place, as shown in Figure 2.

4. Connect center conductor of the gray coaxial cable from the FF-5 to the SW/BC terminal on the rear panel of the FRG-7700.

5. Connect the center conductor of the red coaxial cable to the BC terminal on the rear panel of the FRG-7700.

6. Connect both outer conductors of the gray and red coaxial cables to Terminal E of the FRG-7700.

OPERATION OF THE SWITCH

SW/BC Position

When you receive signals above 2 MHz, or strong signals below 2 MHz, the switch should be placed in this position. While set in this position, your antenna should be connected to the SW/BC terminal.

BC Position

Set the switch to the BC position when receiving weak signals below 2 MHz. If the signal is receiving interference from strong stations on other frequencies, use the ATT switch on the rear panel of the FRG-7700 to help reduce the interference.

While the switch is in the BC position, your antenna connection should be made to the BC terminal.

150 – 500 kHz Position

When you receive weak signals in the range of 150 – 500 kHz, set the switch to this position and connect your antenna to the BC terminal. Signals which may cause interference in this range will be rejected.

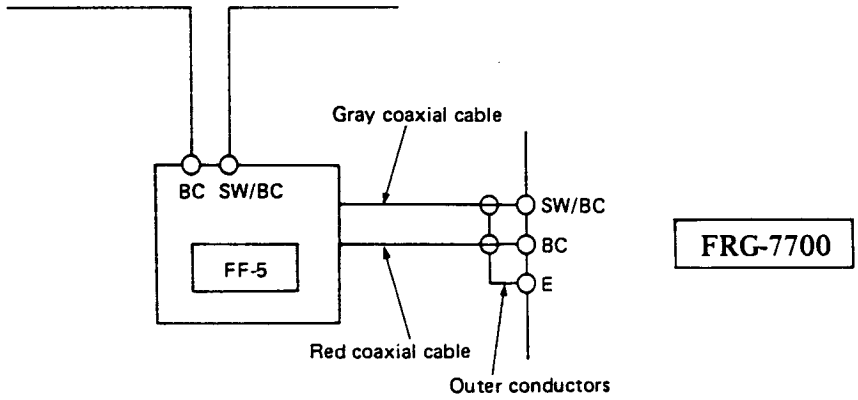

CONNECTIONS

BC Terminal

This terminal can be used to receive weak signals below 2 MHz. However, when receiving local stations, your antenna should be connected to the SW/BC terminal.

SW/BC Terminal

This connector will accept the connection of both antennas to receive above and below 2 MHz. Normally, an antenna is connected to this terminal.

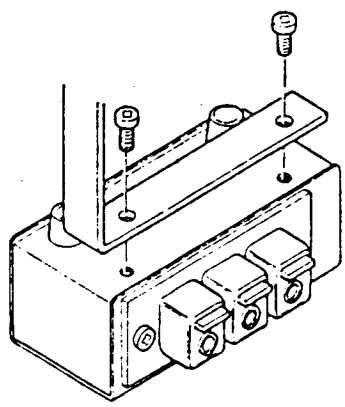

Fig. 1

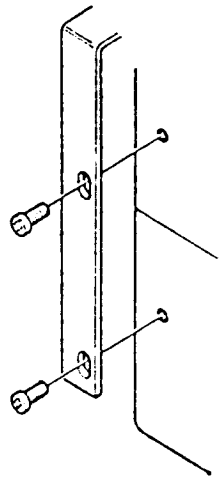

Fig. 2

FRT-7700 INSTALLATION PROCEDURE

1. Connect the center conductor of the gray coaxial cable coming from the rear panel of the FRT-7700 to the SW/BC terminal on the rear panel of the FRG-7700. Connect the center conductor of the red coaxial cable to the BC terminal. Both outer conductors of the coaxial cables should be connected to terminal E.

2. Your antenna should be connected to the ANT B terminal for normal operation. This terminal accepts incoming signals from 150 kHz to 30 MHz. However, the ANT B terminal is best utilized when you are interested in receiving weak signals in the range of 150 kHz to 500 kHz.

   The coaxial receptacle (SO-239) is connected parallel to the ANT B terminal in the FRT-7700. If your antenna feeder has a coax plug, it should be connected to the coaxial receptacle.

OPERATION

1. Set your FRG-7700 for normal operation on the frequency you desire.

2. Preset the controls and switches as follows:

TUNER	– OFF
ATT	– 0 (dB)
BAND	– Desired band
MATCHING	– 3

3. Tune the FRG-7700 to your desired signal.

4. Push the TUNER switch on, and adjust the TUNING control for maximum deflection on the S-meter.

5. Change the position of the MATCHING selector to the point where the S-meter reaches maximum deflection.

6. Repeat the adjustments in Steps 4 and 5 until a maximum S-meter reading is obtained. In some cases, the best sensitivity is obtained at either one range above or below the specified coverage of the BAND switch, a trick you might try when you are unable to obtain sufficient sensitivity.

7. When your receiving station receives interference from strong signals, try reducing all incoming signals by adjusting the ATT control, until you find a position where you can receive the signals clearly.

8. When weak signal reception below 2 MHz is desired, push the OUT switch to DXBC, and the weak signals will be clearly received.

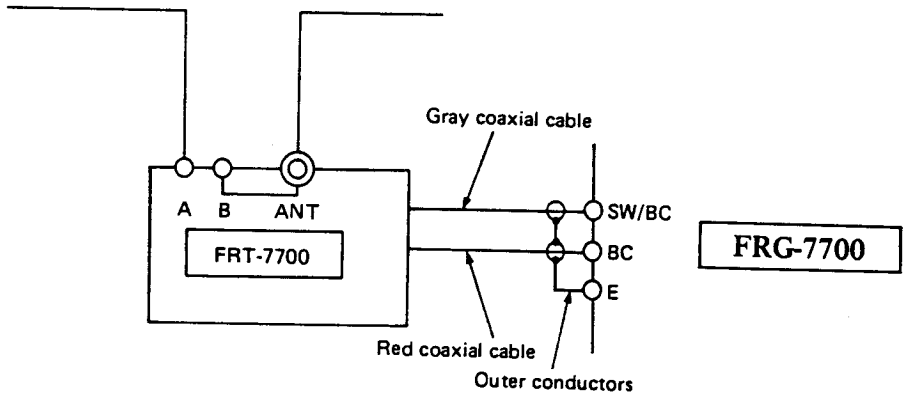

FRV-7700 INSTALLATION PROCEDURE

FRONT PANEL SWITCHES AND CONTROLS

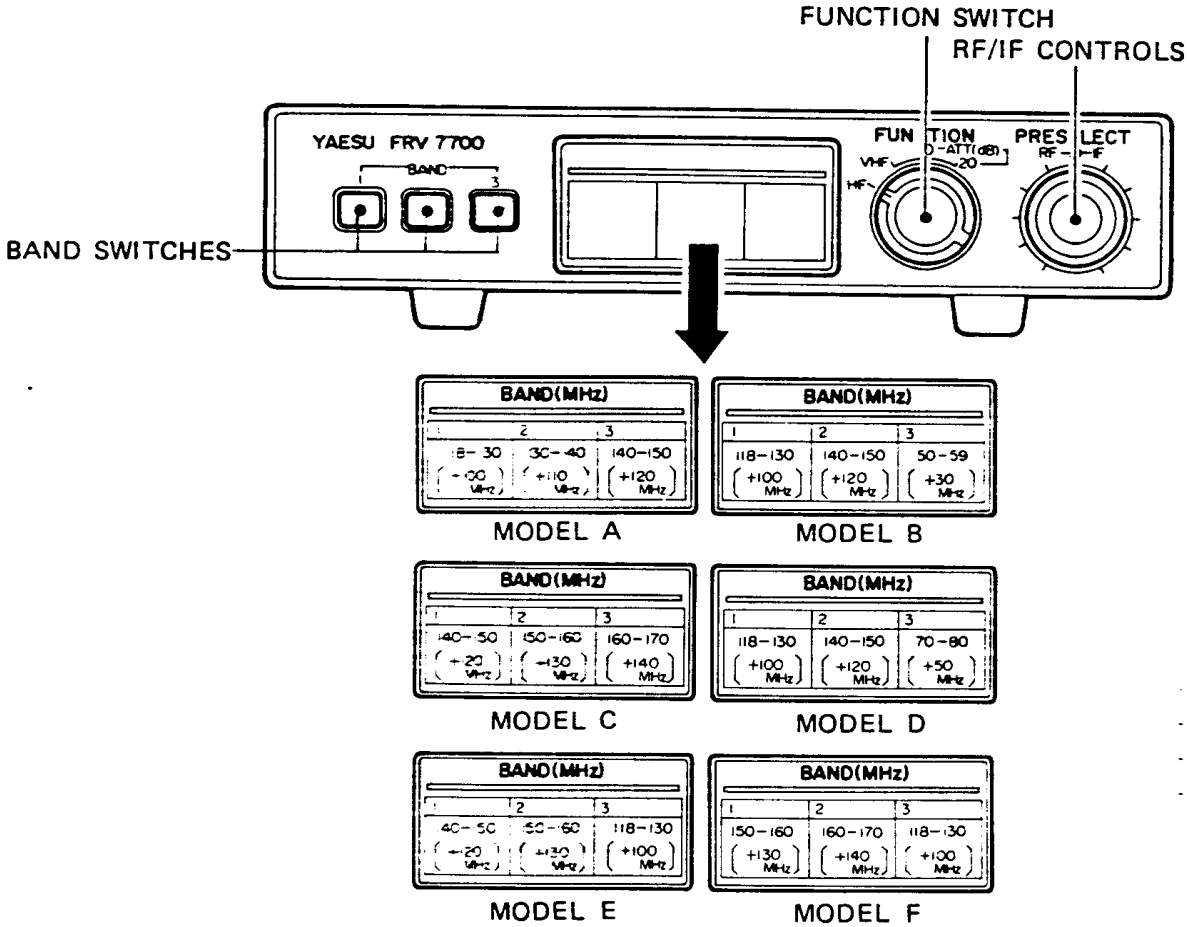

BAND Switches

These three switches select the desired coverage, shown on the front panel.

FUNCTION Switch

This switch activates the FRV-7700, and in the 10 or 20 dB ATT position the receive signal is attenuated. When this switch is placed in the HF position, the FRV-7700 is switched off and the HF antenna is connected through the FRV-7700.

RF and IF Controls

These controls tune the RF and IF resonators exactly to your receive frequency, providing maximum sensitivity and rejection of unwanted signals. During operation, adjust these controls for a maximum S-meter reading on each frequency.

REAR PANEL CONNECTIONS

VHF

This jack accommodates the antenna for the VHF band.

SW/BC, BC, E

These terminals accommodate antennas for BC and HF bands. When the FUNCTION switch is in the HF position, the signal from the antenna connected to these terminals is fed through the FRV-7700 to the FRG-7700. Antenna connection should be done in the same manner as that of the FRG-7700 (refer to the FRG-7700 Instruction Manual).

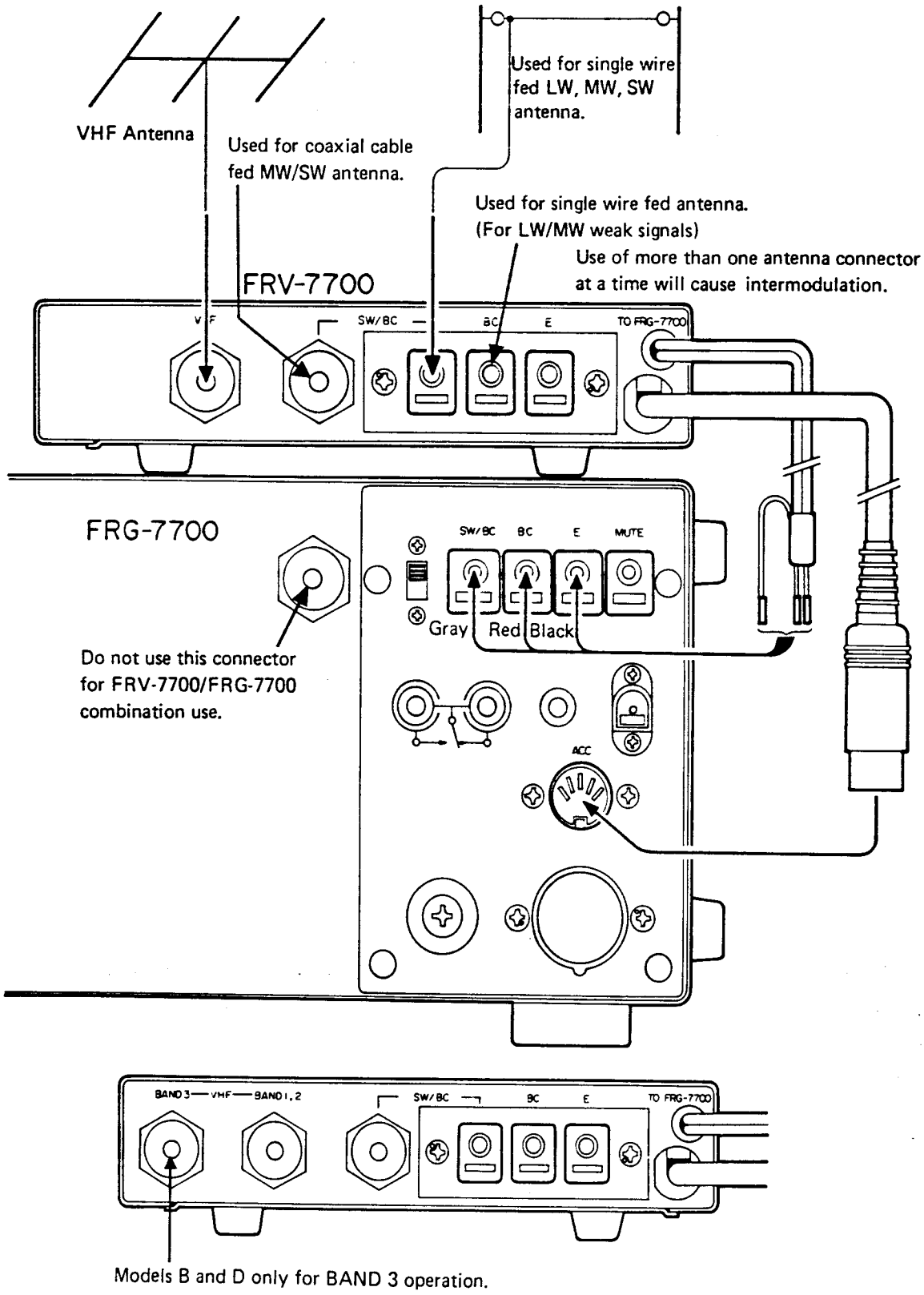

FRV-7700/FRG-7700 INTERCONNECTIONS

Connect the GRAY wire to the SW/BC terminal on the FRG-7700, the RED wire to the BC terminal and the BLACK wire to the E terminal.

Connect the DIN plug to the ACC jack on the FRG-7700 rear panel, which provides AGC voltage, the source voltage of the FRV-7700. When the FRV-7700 is used with the FRG-7700, make no antenna connections to this jack, so as to avoid any signal feeding directly from this jack to the receiver.

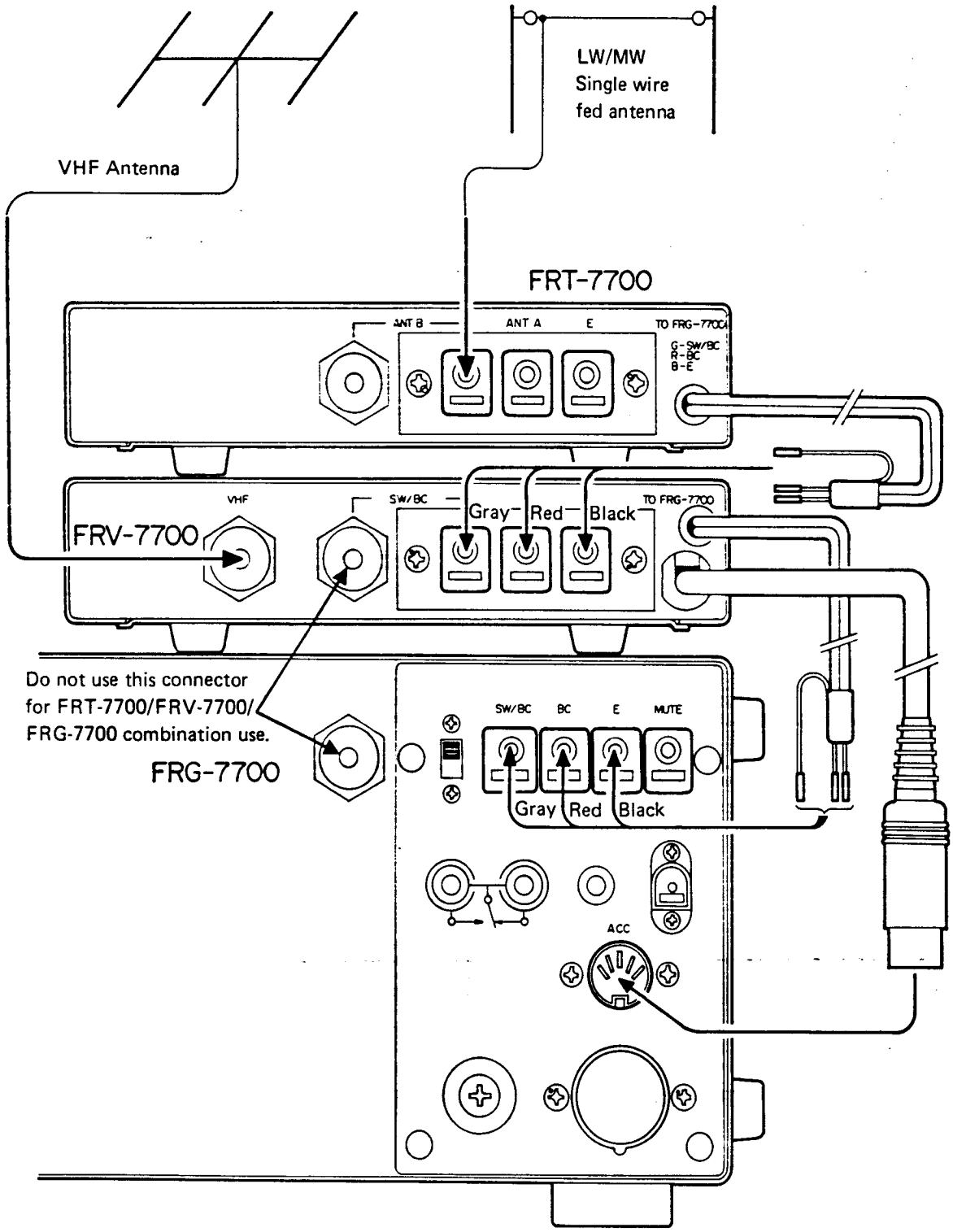

FRT-7700/FRV-7700/FRG-7700 INTERCONNECTIONS

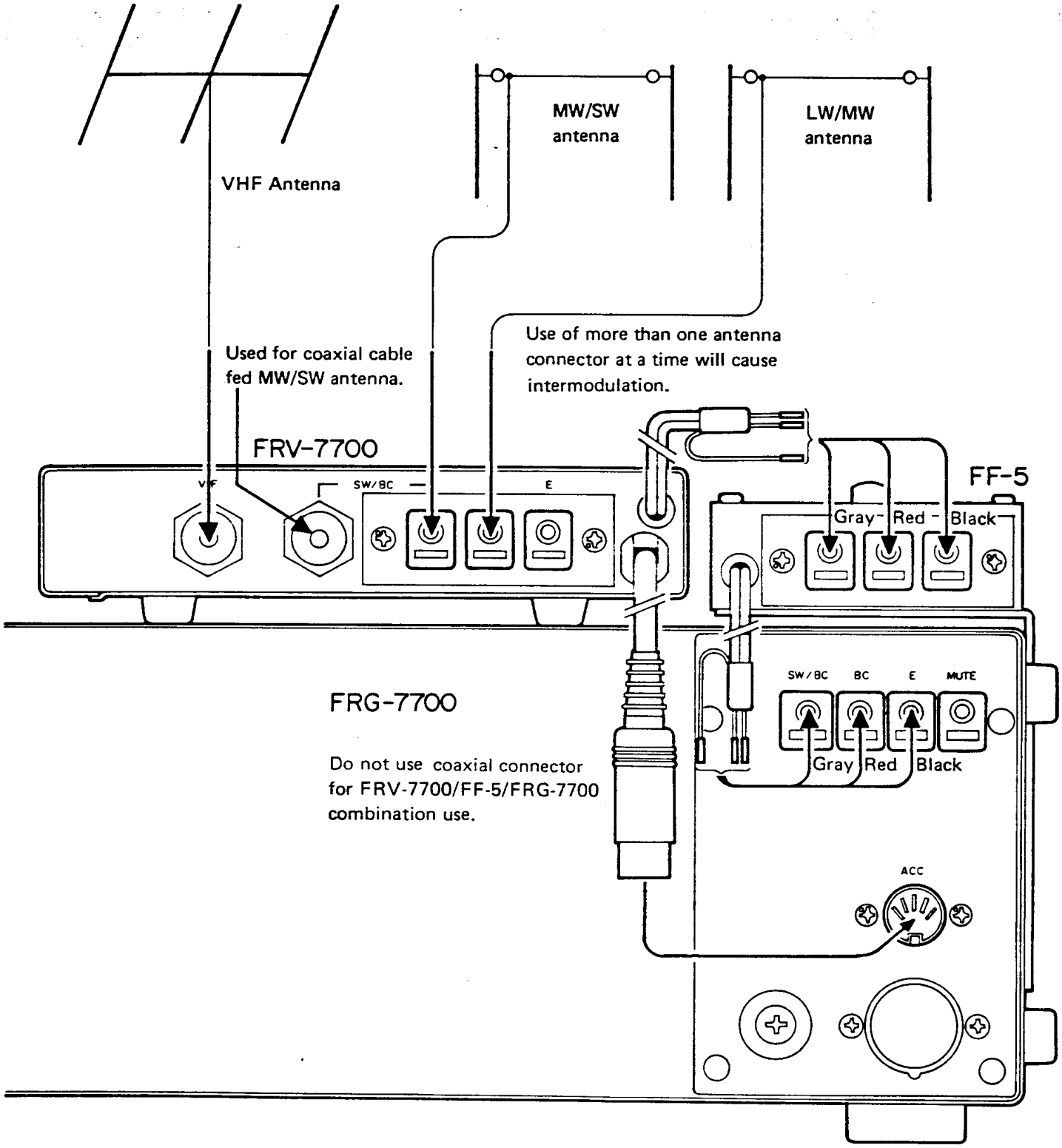

FRV-7700/FF-5/FRG-7700 INTERCONNECTIONS

OPERATION

The frequency conversion provided by the FRV-7700 is shown on the front panel. The FRV-7700 uses the 18–30 MHz portion of your FRG-7700 as its tuning range, transforming it up to the VHF frequency by shifting it the amount shown in parentheses in the BAND table.

For example, on Model A, Band 2 provides a frequency shift of +110 MHz. Thus, when tuning 20–30 MHz on your FRG-7700, the converted frequency is 130–140 MHz. Likewise, on Model A, Band 3 causes a conversion of +120 MHz, producing a tuning range of 140–150 MHz when you tune 20–30 MHz on your FRG-7700.

Look at the examples below. Push Band 3 to select 140–150 MHz. Now tune the FRG-7700 to 25.000 MHz. The resulting frequency will be 145.000 MHz, in the middle of the 2 Meter Amateur Radio band.

Taking another example, push the BAND 1 switch to engage a +100 MHz conversion. Tune the FRG-7700 to 28.800 MHz, and the resultant frequency received will be 128.800 MHz.

For normal operation, set the FUNCTION switch to VHF, and set the FRG-7700 BAND switch as needed to produce the desired frequency in accordance with the BAND switch engaged on the FRV-7700. Turn the FRG-7700 POWER switch ON.

Adjust the FRV-7700 RF GAIN and IF GAIN controls for maximum deflection on the FRG-7700 S-meter while listening to an incoming signal. This peaking of these controls will ensure maximum sensitivity and rejection of out-of-band signals.

When extremely strong signals are present, you may want to activate the 10 dB or 20 dB attenuator to reduce cross-modulation or intermodulation products which may be hampering reception. These signals are characterized by occasional squealing, unintelligible signal quality. Set the FUNCTION switch to either the 10 dB or 20 dB position, as necessary, to reduce the interference level.

FREQUENCY READOUT

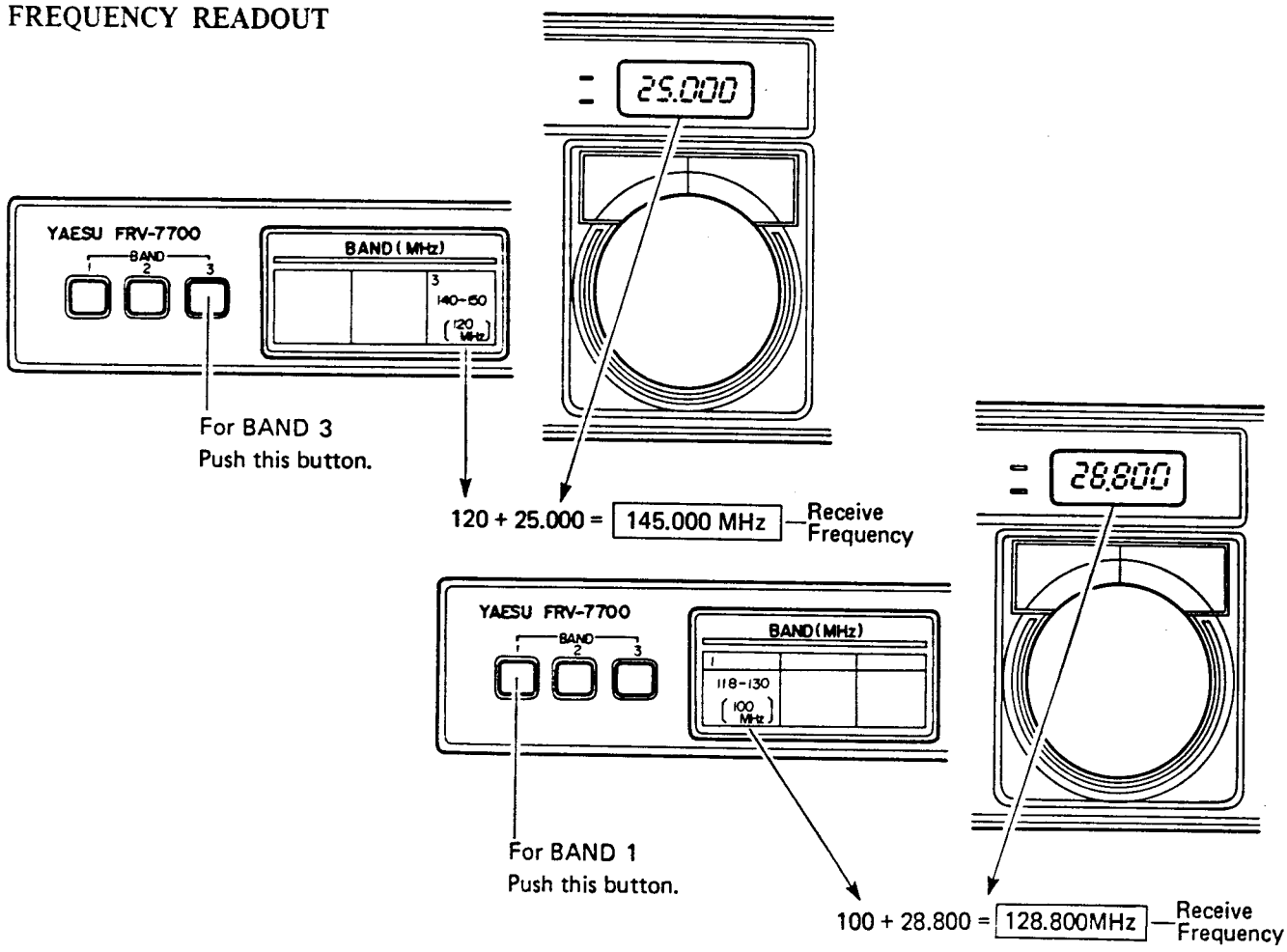

FRA-7700
INSTALLATION AND OPERATION

1. On the end of the cable from the FRA-7700 connect the wire with the grey tab to the SW/BC terminal on the FRG-7700, and the wire with the red tab to the BC terminal. Similarly, connect the wire with the black tab to the E terminal on the FRG-7700. Connect the DIN plug from the FRA-7700 to the ACC jack.

2. Preset the controls and switches on the FRA-7700 as follows:
   PREAMP ..... ON
   OUT ..... SW/BC position
   GAIN..... fully clockwise
   BAND ..... as desired

3. Fully extend the telescoping antenna on the FRA-7700.

4. Set the FRG-7700 to receive the desired frequejcy (as in step 2).

5. Adjust the TUNING control on the FRA-7700 for a peak in the signal on the receiver. If this peak occurs at either the fully clockwise or counterclockwise positions of the TUNING control, set the BAND switch to an adjacent position and tune again for a peak.

6. Adjust the angle and position of the telescoping antenna for maximum signal.

7. If a strong signal on a nearby frequency interferes with your desired signal, reduce the GAIN control setting to minimize the interference.

8. When you attempt to receive very weak signals on frequencies below 2 MHz, set the OUT switch to the DX BC position.

Note:

If you have the FRA-7700 connected to the receiver and switched OFF, such as when listening to strong local signals or through another antenna, you may need to set the BAND switch and TUNING control on the FRA-7700 to peak the received signal (even though the FRA-7700 is switched off).

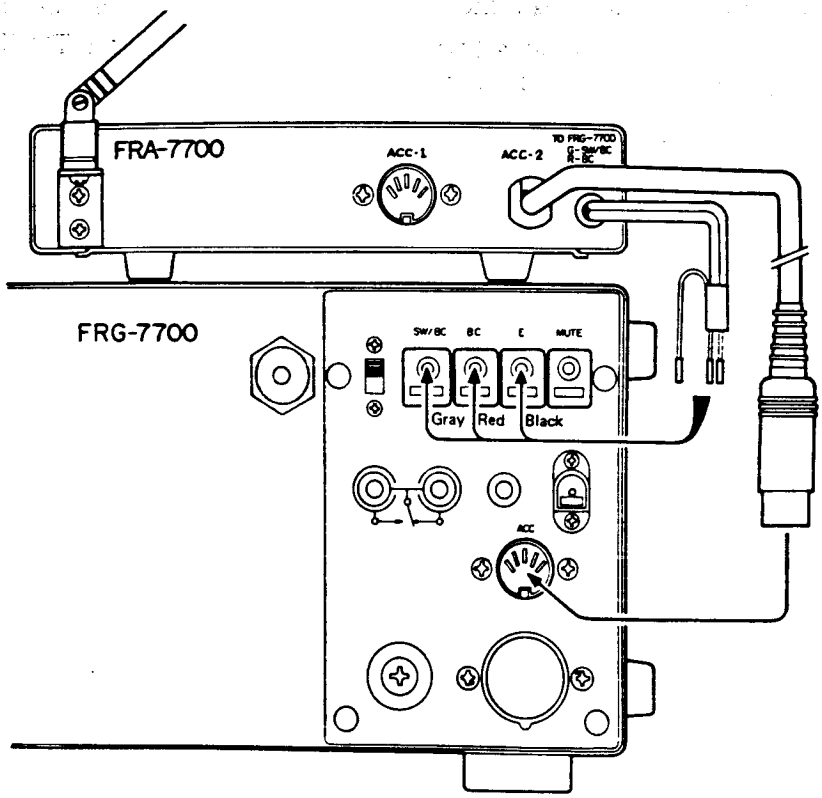
FRA-7700
ACC-1
ACC-2
TO FRG-7700
G-SW/BC
R-BC
FRG-7700
SW/BC
BC
E
MUTE
Gray
Red
Black
ACC

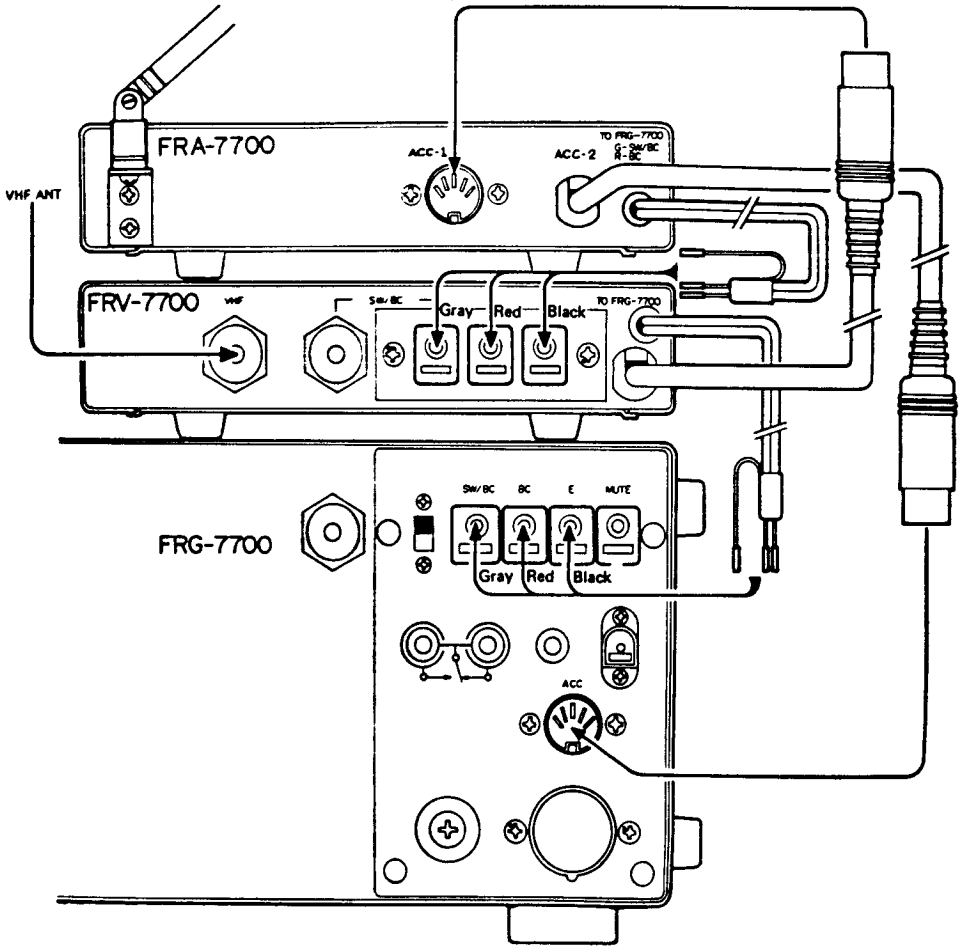
FRA-7700
ACC-1
ACC-2
TO FRG-7700
G-SW/BC
R-BC
VHF ANT
FRV-7700
VHF
SW/BC
Gray
Red
Black
TO FRG-7700
FRG-7700
SW/BC
BC
E
MUTE
Gray
Red
Black
ACC

OPERATION

Operation of the FRG-7700 is extremely straightforward. However, the owner should read these pages carefully so as to derive maximum performance from this equipment. Before attempting operation, make certain that all power, antenna, and ground connections have been made correctly.

FREQUENCY SELECTION

The operating frequency is read directly from the digital display. All digits of the operating frequency are displayed, with resolution to 1 kHz. The BAND switch is calibrated in 1 MHz steps, from 0 MHz through 29 MHz, with an additional 10 steps being provided for instant presetting to the bands containing the amateur radio (ham) bands.

To select a frequency, first set the BAND switch to the desired 1 MHz segment, then rotate the main dial to select the last three digits of the frequency. A coarse frequency determination may also be made through the main dial window, which is calibrated every 10 kHz.

AM BROADCAST RECEPTION

(1) Virtually all commercial broadcast stations in the MF and HF bands use the AM (Amplitude Modulation) mode of operation. To begin, turn the power switch on, and set the mode switch to AM M (AM mode, medium bandwidth).

(2) Tune in an AM station to the point where the S-meter reading reaches a maximum.

(3) If there is very heavy interference, you may wish to set the mode switch to the AM N (AM mode, narrow bandwidth) position. This will provide maximum rejection of adjacent-frequency interference, although the narrower bandwidth will cause some loss of fidelity. Conversely, if there is very little interference, you may switch to the AM W (AM mode, wide bandwidth) position. This will provide maximum fidelity.

(4) The TONE control on the front panel may be used to vary the audio response characteristics of the receiver. For example, if you are troubled by a high-pitched "heterodyne" signal, rotate the TONE control in a counterclockwise direction to reduce this interference.

(5) When extremely strong signals are encountered, the operator may want to reduce the level of these signals. Rotate the ATT (Attenuator) control on the front panel clockwise to reduce the strength of the incoming signals. Should you desire to activate the fixed 20 dB attenuator, set the rear panel ATT switch to LOCAL. For most listening, though, leave this switch set to the DX position.

(6) For reduction in impulse-type noise (automobile ignition, etc.), push the NB (Noise Blanker) switch. This circuit is highly effective in minimizing this type of interference.

(7) An Automatic Gain Control (AGC) circuit is included in your FRG-7700. This feature keeps signal strengths adjusted to a constant level under conditions of fading. When rapid fading conditions are encountered, you may want to set the AGC switch to FAST, as the use of the SLOW position might cause a weak signal to be obliterated by an adjacent-frequency station which is much stronger. With some experience, the operator will soon learn the proper settings of the MODE and AGC switches for operation under a variety of conditions.

AMATEUR RADIO (HAM) BAND RECEPTION

Amateur radio operators use a variety of operating modes on the HF bands. However, your FRG-7700 is well equipped to receive the various types of ham signals encountered in day-to-day operation.

SSB Voice Signals

(1) Amateur radio operators use lower sideband (LSB) on the bands below 10 MHz, and upper sideband (USB) above 10 MHz. Set the mode switch accordingly.

(2) Turn the power switch on. The meter lamp and digital display will become illuminated.

(3) Rotate the ATT control fully counterclockwise, and adjust the AF GAIN control for a comfortable listening level.

(4) Now rotate the main tuning dial until a voice signal is found. Careful adjustment of the main tuning dial will result in excellent clarity on the incoming SSB signal. Under conditions of rapid fading, set the AGC switch to FAST.

(5) When pulse-type ignition noise is encountered, push the NB switch.

(6) Adjacent frequency interference may be reduced substantially by counterclockwise rotation of the TONE knob. Also, advancing the ATT knob in a clockwise direction may result in some reduction of interference from a strong adjacent station; such a station may be so strong that the AGC control may cause the receiver to be "pumped," and reduction of the receiver front end gain will reduce this effect.

(7) Note that the bandswitch contains nine bands which correspond to the amateur radio allocations. This allows simplified band changing when listening to amateurs. The 10, 18, and 24 MHz bands, newly assigned to the amateur service, are not yet approved for amateur operation in most countries, and no amateur operations will be heard until action is taken by the governments involved.

Morse Code (CW) Reception

Morse Code transmissions may be received by placing the mode switch in either the USB or LSB/CW position. The operator may find that adjacent-frequency interference conditions are better in one or the other of the above modes, and that position should be used until conditions change. The main tuning dial should be rotated until a comfortable listening pitch is obtained.

Frequency Modulation (FM) Reception

Frequency modulation operation is becoming more popular on the 29 MHz amateur band. Also, the operator may wish to use the FRG-7700 with a VHF/UHF converter, for listening to FM repeater operation on the VHF and/or UHF bands. Set the mode switch to FM, and rotate the main tuning dial until the best fidelity on the incoming signal is obtained.

For FM operation, the front panel squelch (SQL) control should be advanced to the point where the receiver is just silenced when no signal (only noise) is being received. This will allow silent monitoring during long periods when no stations are active.

MEMORY OPERATION

The memory feature provides a means of storing frequencies you may want to recall at a later time. Up to twelve stations may be stored in memory. Here is the simple procedure for memory storage and recall:

(1) Set the M FINE control to the 12 o'clock position. Rotate the M CH switch to memory channel 1.

(2) Tune the receiver to the desired station, being careful to tune for best clarity and fidelity. Press the M (Memory) button. The station is now stored. Continue tuning for additional stations, if desired, and store them in the other memory channels.

(3) To recall a station previously stored, rotate the M CH switch to the appropriate channel, and press the MR (Memory Recall) button. If several stations are stored in the various memory channels, simply rotate the M CH switch to the desired channel.

(4) To return control to the main tuning dial, simply push the MR button again. The MR lamp will turn off, and normal tuning will again be possible. The stations stored in memory will not be lost if you release the MR switch; just press it again to return to the memory.

(5) Note that stations on different bands may be stored in memory. Once stored, they may be recalled without the need to rotate the band switch to the appropriate band. In other words, you may store stations in the 11 MHz, 15 MHz, and 21 MHz bands as you tune them in using the band switch and main tuning dial; once you press the MR button, you only need to rotate the M CH switch to recall these stations, with no change in the position of the bandswitch required.

(6) The M FINE control may be used to provide fine tuning of ±1 kHz from a memorized frequency. This may be necessary should the memorized station begin to drift, or should propagation conditions cause new interference to appear on frequency. Judicious use of the AM N position of the mode switch, along with the M FINE control, will provide solid copy on many stations that might otherwise be obliterated by interference.

DIGITAL CLOCK OPERATION

The built-in digital quartz clock is a highly accurate timepiece which adds convenience and flexibility to your FRG-7700 station. The clock will operate so long as the receiver is plugged in, and it will also operate off of the memory backup batteries. When the receiver is initially plugged in, the clock will indicate AM 1:00 and will begin counting. Setting the time is a simple procedure, as shown below.

Example: set the clock to 5:25:00 PM

(1) Place the FUNCTION switch in the CLOCK position, then push and hold the HOUR SET button. The minutes and seconds will reset to zero. Tune in WWV at 10 MHz (or another international time standard) on the receiver. When the time standard ticks off the start of a new minute, release the HOUR SET button. This will align the count of the seconds to the international time standard.

(2) Push the HOUR button to advance the hour digit to 5:00. If the HOUR button is held for more than two seconds, the hour digits will advance rapidly until the HOUR button is released.

(3) Push the MINUTE button to advance the minute digit to 25. When the MINUTE button is pressed and held, the digits will advance rapidly, in the same manner as the hour digit.

(4) The clock should be accurate within 15 seconds per month. When setting the clock, be certain that the appropriate AM/PM digit is illuminated.

TIMER OPERATION

Four timer functions are available. They are:

ON Timer
In this mode, the receiver is turned on at a pre-programmed time.

OFF Timer
In this mode, the receiver is turned off at a pre-programmed time.

ON/OFF Timer
In this mode, both the on and off times are preset for power control of the receiver.

SLEEP Timer
In this mode, you may set a listening time of up to 59 minutes, after which the receiver will turn off.

To set the timer for on/off automatic control of the FRG-7700, proceed as follows (example–on time 10:30 AM, off time 11:30 AM)

(1) Set the POWER switch to OFF, and set the function switch to the ON position.

(2) Set the display to 10:30 AM by pushing the HOUR and MINUTE buttons, in the same way as you did when you preset the clock earlier.

(3) Set the function switch to OFF. Set the display to 11:30 AM by pushing the HOUR and MINUTE buttons.

(4) Push the TIMER switch to activate the timer. The FRG-7700 will turn on at 10:30 AM, and turn off at 11:30 AM. Be certain to observe the AM or PM lamps when programming the on and off times.

(5) If you want to turn the receiver off before the programmed off time, push the TIMER CLEAR button.

To set the sleep timer, proceed as follows:

(1) Turn the POWER switch OFF, and set the function switch to the SLEEP position.

(2) Push the MINUTE switch once. This will cause the sleep time to count back from the 59 minute mark by one minute. Holding the MINUTE button down will cause the time to change rapidly, in the same manner as described earlier. If you set the display to 40, the receiver will stay on for 40 minutes, then shut off.

(3) If you want to turn the receiver off before the programmed off time, push the TIMER CLEAR button.

NOTES REGARDING PROPAGATION OF SHORTWAVE SIGNALS

While a complete discussion of the physics of shortwave radio signal propagation is well beyond the scope of this manual, some guidelines are presented below to help you to choose the optimum listening frequency for the time of day and the time of year in which you are operating. This discussion will also help you when you are reading the schedules of overseas broadcast stations; you will soon be able to know instantly why you cannot expect to hear Tokyo on 3.9 MHz at 1:00 in the afternoon.

Shortwave signals are transmitted by huge stations running many thousands of watts of power. Their antenna systems are elaborate and expensive. But all of this equipment would be useless were it not for a property of the ionosphere (a layer of the atmosphere high above the earth) which causes signals to be reflected back to earth when they strike the ionosphere.

Depending on several factors, including the time of day, the time of year, and the current state of solar activity (determined primarily by "sunspots"), the optimum frequency for reflection over a particular distance will change. Another aspect that can be noted is that, for a particular frequency on which you are operating, the distance over which signals will be propagated will change. Thus, in order to hear stations 12,000 km away over a long period of time on a particular day, you will likely have to change your operating frequency (consistent with the broadcast station schedules!) in order to take advantage of changing propagation conditions.

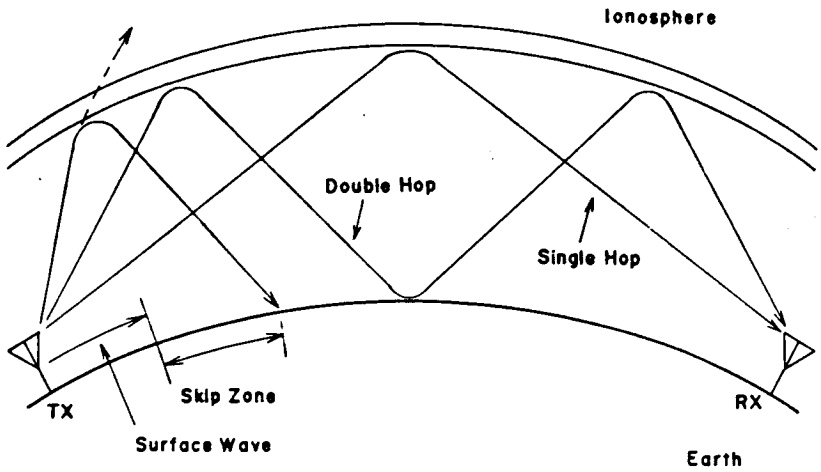

As a general rule, daytime propagation conditions will be best on frequencies from about 12-14 MHz and higher. Propagation at night will generally be best on the 2-15 MHz bands. These general rules often have exceptions, of course; during periods of high solar activity, the 21 MHz band may, for example, be excellent for long-distance propagation well into the night. However, it would be highly unusual for the bands below about 8 MHz to support transoceanic propagation throughout the daytime period.

When reading broadcast station schedules, one must consider not only the time of day at one's own location, but also the time of day at the transmitter location. Let us examine the example of two broadcast stations, one in Tokyo and one in Moscow, both operating on 6 MHz at 6:00 PM local time (for our example, let us say that you live in New York City, USA). Because there are night-time conditions across most, if not all, of the North Atlantic path that a signal would follow on its way from Moscow to New York, one would normally have a good chance of receiving the broadcast from Moscow. However, the path from Tokyo to New York is largely a daylight path, and our rule of thumb discussed earlier would tell us that it would be difficult, if not impossible, to hear Tokyo at that time on that frequency.

However, if one reads further down the schedule of the Tokyo schedule, a broadcast on 15 MHz at the same time may be found. The 15 MHz region (±5 MHz) is a middle ground which often supports round-the-clock propagation. You would have a much better chance of hearing Tokyo on 15 MHz, because the path is largely over daylight.

Broadcast station managers are well aware of this phenomenon, and this is the reason why their schedules indicate "North American Service" or "Programming Beamed at Southeast Asia." They take propagation conditions into consideration, and aim their antennas carefully, so as to have the best chance of reaching their target area at a time when people will be at home to listen.

The time of year is important for several reas For example, at 4:00 PM in New York in June, sun is still high in the sky. But at 4:00 PM December, twilight is fast approaching, and ni time conditions are taking over on the Nc Atlantic path. Broadcast station managers ad their schedules so as to use the lower frequen (below 10 MHz) more heavily in the wir months, because of the increased distance cove by darkness during the winter.

Signals do not always follow the shortest dista from point A to point B (called the "Great Circ path). They sometimes follow a bent path, or exactly the opposite of the great circle. This is v it is sometimes possible to hear Tokyo fr New York on 7 MHz late in the afternoon the winter, even though the Great Circle p is in daylight; the signals are traveling alon darkness path around the world. The fact t many stations are louder, and that the tr mitting antenna may not be beamed on optimum path at that time, makes recept extremely difficult. But this is the excitemen shortwave listening—hearing the unexpected. Un tough conditions such as this, the AM-N (nar bandwidth) position of the mode switch will pr itself to be a highly useful feature.

To conclude our discussion on propagation co tions, we would stress the following general ru First, use the higher frequencies (15 MHz and as your main daylight bands. Secondly, use the frequencies (below 15 MHz) as your prime ni time bands. Thirdly, look for peaks in propagat when there is sunrise or sunset at one end another of a propagation path. For example, lo for a peak in 26 MHz propagation towards East for the hour or so after your sunrise, toward the West around your sunset.

Careful planning of your operating times, pro choice of listening frequencies, and diligent st of schedules from overseas broadcast stations pay rich dividends in entries in your log bo We hope that this section will have helped understand the fascinating world of shortw radio propagation better.

SECTION 2—TECHNICAL NOTES

BLOCK DIAGRAM

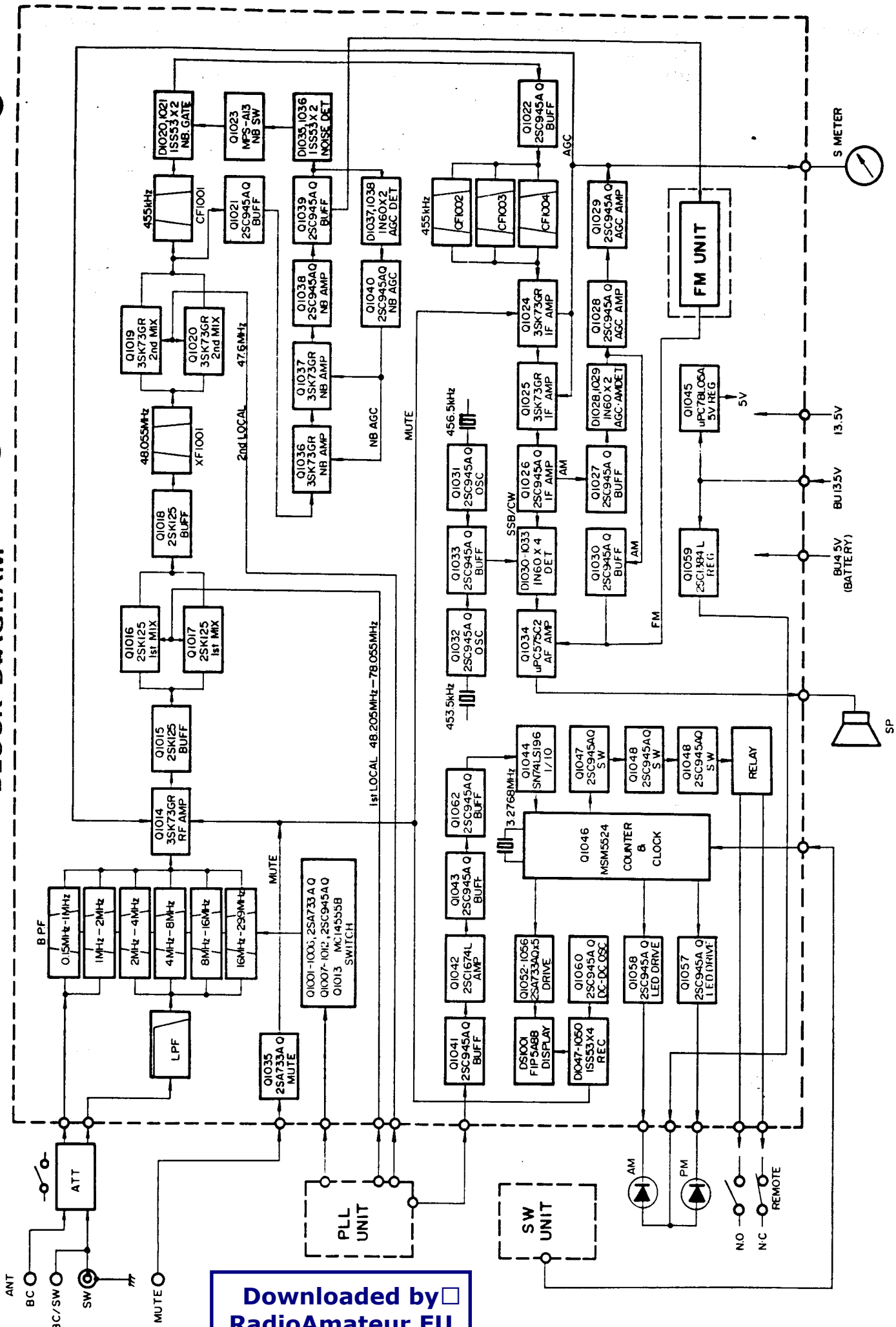

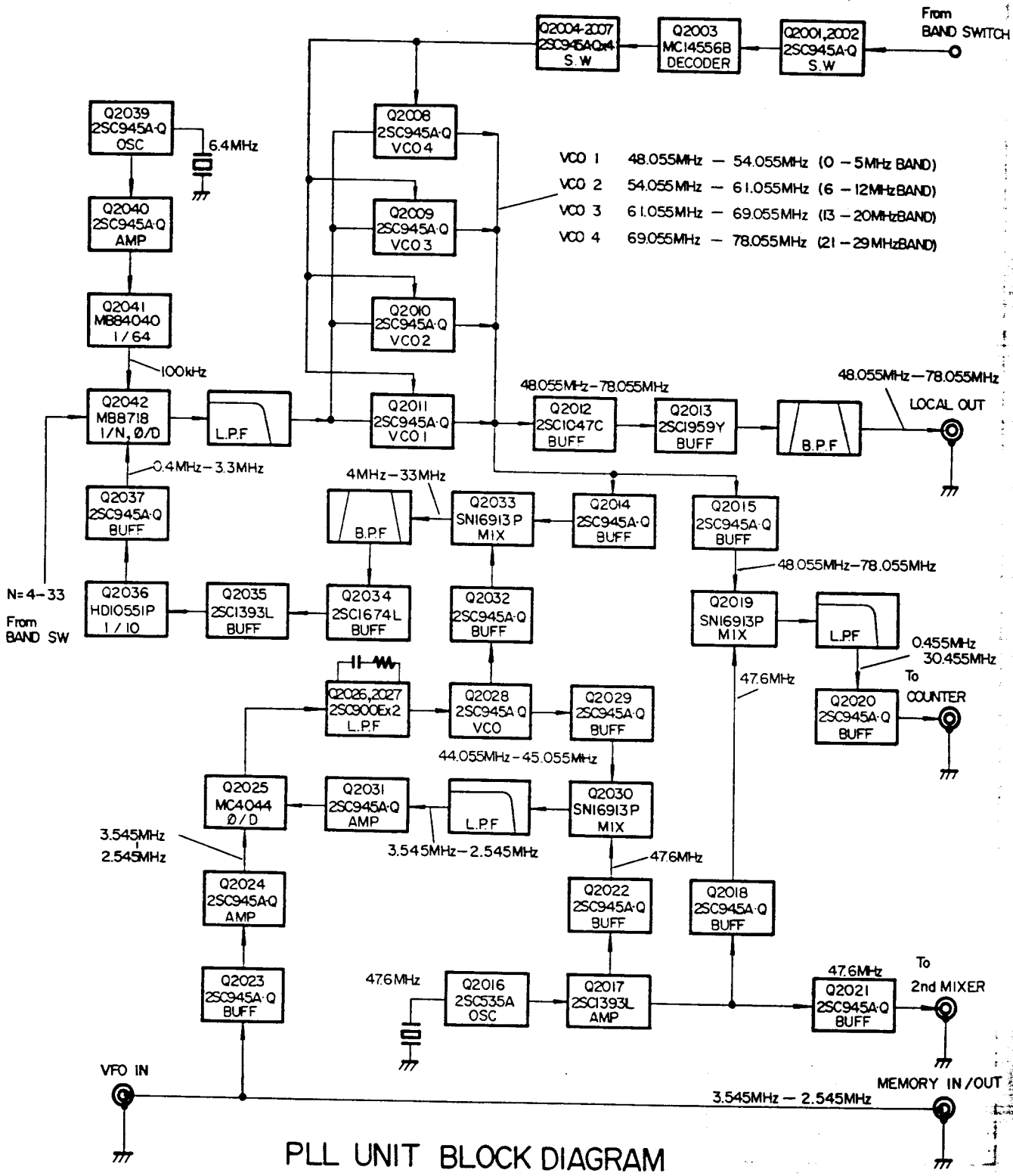

PLL UNIT BLOCK DIAGRAM

CIRCUIT DESCRIPTION

Reference to the block diagram and the following circuit description will provide you with a better understanding of the design of this receiver. The FRG-7700 is a superheterodyne receiver using up-conversion to a first IF (Intermediate Frequency) of 48 MHz. Synthesized local oscillators are used for both the first and second mixers, providing a high degree of frequency stability.

RECEIVER SIGNAL FLOW

The RF (Radio Frequency) signal from the antenna is fed through the defeatable RF attenuator to the MAIN Unit. The signal is passed through a low-pass filter (f_C = 30 MHz), consisting of L_{1001}, C_{1001}, C_{1002}, and then through bandpass filters for the following ranges: 150 kHz – 1 MHz, 1 – 2 MHz, 2 – 4 MHz, 4 – 8 MHz, 8 – 16 MHz, and 16 – 30 MHz. Selection of the filter to be used is provided by diode switches D_{1001}–D_{1012} (1SS53), which are driven by Q_{1013} (MC14555), Q_{1001}–Q_{1006} (2SA733), and Q_{1007}–Q_{1012} (2SA945A-Q), according to the setting of the band switch.

The signal is then amplified by RF amplifier Q_{1014} (3SK73GR), a dual-gate MOS FET with superior linearity and low noise figure. The amplified signal is then fed through buffer Q_{1015} (2SK125) to the first mixer, where the RF signal is mixed with the first local oscillator signal (48.055 – 78.055 MHz) delivered from the PLL Unit, resulting in a 48.055 MHz first IF. This up-conversion technique provides superior image rejection characteristics when compared with conventional designs.

The first IF signal is amplified by Q_{1018} (2SK125) and fed through crystal filter XF_{1001}, which has a 20 kHz bandwidth at –6 dB, providing protection from in-band intermodulation distortion while allowing sufficient bandwidth for effective noise blanking. The signal is then delivered to the second mixer, where the 48.055 MHz first IF signal is mixed with a 47.6 MHz local oscillator signal from the PLL Unit, producing a 455 kHz second IF signal.

The 455 kHz signal is passed through a ceramic filter, CF_{1001} (20 kHz/–6 dB) and noise blanker gate diodes D_{1020}/D_{1021} (1SS53) to the main IF filters: CF_{1002} (SSB/AM-N), CF_{1003} (AM-M), and CF_{1004} (AM-W), with filter selection made via the mode switch. The filtered IF signal is then delivered to the main IF amplifier chain, consisting of Q_{1024}, Q_{1025} (3SK73GR), and Q_{1026} (2SC945A-Q).

In the SSB and CW modes, the IF signal is coupled to the product detector, a diode ring demodulator consisting of D_{1030}–D_{1033} (1N60), which converts the IF signal into audio using the carrier signal delivered from Q_{1033} (2SC945A-Q). The audio signal is fed to the audio amplifier, Q_{1034} (μPC575C2), which delivers 1.5 watts of audio power to the speaker.

In the AM mode, the IF signal is coupled from Q_{1026} via C_{125} to buffer amplifier Q_{1027} (2SC945A-Q). The signal is then detected at D_{1028}/D_{1029} (1N60), and the resulting audio signal is fed to the audio amplifier via buffer amplifier Q_{1030} (2SC945A-Q).

NOISE BLANKER CIRCUIT

A portion of the output from the second mixer is fed through buffer Q_{1021} (2SC945A-Q) to amplifiers Q_{1036}, Q_{1037} (3SK73GR) and Q_{1038}, Q_{1039} (2SC945A-Q). When a carrier or noise-free modulated signal is received, the IF signal is rectified by D_{1037} and D_{1038} (1N60), producing a DC voltage. The DC voltage is amplified by Q_{1040} (2SC945A-Q) and fed to gate 2 of Q_{1036} and Q_{1037}, controlling the gain of those stages.

When pulse noise is received, D_{1035} and D_{1036} (1SS53) rectify the IF signal, producing a DC voltage which controls the noise blanker switching diodes (D_{1020}/D_{1021}). Noise pulses have a very short duration, but extremely high amplitude. Because of the very slow time constant of the AGC circuit feeding back to Q_{1036} and Q_{1037}, these short duration pulses will not induce AGC action, and those stages will operate at full gain. When a pulse is received, however, Q_{1023} biases D_{1020} and D_{1021} to block the signal path momentarily.

When a noise pulse and a desired signal are received simultaneously, the blanking action is not impaired, because the relative amplitude difference between the desired signal and the noise pulse is high.

AGC CIRCUIT

A portion of the output from the AM detector is fed to DC amplifiers Q_{1028} and Q_{1029} (2SC945A-Q). This amplified DC voltage is applied to gate 2 of the RF and IF amplifiers, controlling the gain of those stages.

MUTE CIRCUIT

Q_{1035} is normally in the "ON" state, providing normal bias voltage to gate 1 of Q_{1014} and Q_{1024}. When the MUTE terminal is shorted to ground, Q_{1035} turns off, removing the bias voltage from the above transistors, thus silencing the receiver.

CLOCK AND DIGITAL DISPLAY CIRCUIT

A Large Scale Integration (LSI) chip, Q_{1046} (MSM5524), controls both the display of the operating frequency and the time. An 0.455 – 30.455 MHz signal from the PLL Unit is amplified by Q_{1041}, Q_{1042}, and Q_{1043} (2SC1674L), then fed through divider (1/10) Q_{1044} (SN74LS196) to the LSI chip. The output from Q_{1046} is fed to the flourescent display tube, (DS1001), through segment drivers Q_{1052}–Q_{1058} (2SA733A-Q). Q_{1060} and Q_{1061} act as a DC-DC converter, providing –25 volts DC for the display tube.

The timer control output from the LSI activates relay RL_{1001}, which controls the receiver main power supply ON/OFF function. RL_{1001} also is connected to the REMOTE terminals on the rear panel of the receiver, for control of peripheral station equipment.

PLL CIRCUIT

The first and second local signals (48.055 – 78.055 MHz and 47.6 MHz, respectively) are generated by the dual-loop PLL (Phase Locked Loop) circuit.

A 44.055 – 45.055 MHz signal is generated by VCO (Voltage Controlled Oscillator) Q_{2028} (2SC945A-Q) in PLL Loop 1. This signal feeds mixer Q_{2030} (SN16913P), where the VCO signal is mixed with a 47.6 MHz signal generated by crystal oscillator Q_{2016} (2SC535A), producing a 3.545 – 2.545 MHz signal which is fed to phase detector Q_{2025} (MC4044P). The phase detector compares the phase of the input signal with that of the VFO signal delivered via Q_{2024} (2SC945A-Q); any phase difference is converted to a DC control voltage, which is fed to varactor diodes in the VCO circuit, in order to correct the phase difference and lock the input signal with the VFO signal.

In PLL Loop 2, there are four VCO circuits which are selected by the bandswitch, with the net result being an output signal of 48.055 – 78.055 MHz. This signal is fed to mixer Q_{2033} (SN16913P), where the input signal is mixed with the 44.055 – 45.055 MHz signal delivered from PLL Loop 1, producing a 4 – 33 MHz signal. This signal is fed through divider (1/10) Q_{2036} (HD10551P) to phase detector Q_{2042} (MB8718), which also contains a programmable divider.

Phase detector Q_{2042} compares the phase of the signal from the onboard programmable divider and that of the 100 kHz reference signal generated by Q_{2039}, Q_{2040} (2SC945A-Q), and Q_{2041} (MB84040), producing an error-correcting DC voltage. The dividing ratio of the programmable divider is selected by the bandswitch. The error-correction voltage is fed to varactor diodes in VCO/1 – VCO/4, thus locking a highly stable 48.055 – 78.055 MHz signal, which will be used as the first local signal. The VCO output is fed through buffers Q_{2012} (2SC1047C) and Q_{2013} (2SC1959Y) prior to delivery to the first mixer.

The second local signal (47.6 MHz) is generated by Q_{2016}, then amplified by Q_{2017} (2SC1393L) and fed through buffer Q_{2021} (2SC945A-Q) prior to delivery to the second mixer.

A portion of the first local signal is fed to mixer Q_{2019} (SN16913P), where the signal is mixed with the 47.6 MHz second local signal, producing a signal at 0.455 – 30.455 MHz which is fed to the LSI chip in the counter for display of the operating frequency.

CRYSTAL DATA

FUNCTION		HOLDER	RANGE (MHz)	MODE	LOAD C	EFFECTIVE RESISTANCE	DRIVE LEVEL
MAIN UNIT	X1001	HC-18/U	3.2768	Fundamental	30pF	150Ω	3mW
PLL UNIT	X2001	HC-18/U	47.6	3rd Overtone	20pF	25Ω	2mW
PLL UNIT	X2002	HC-18/U	6.4	Fundamental	30pF	30Ω	3mW
MEMORY UNIT	X6001	HC-18/U3P	16.434	Fundamental	30pF	15Ω	3mW

FRT-7700

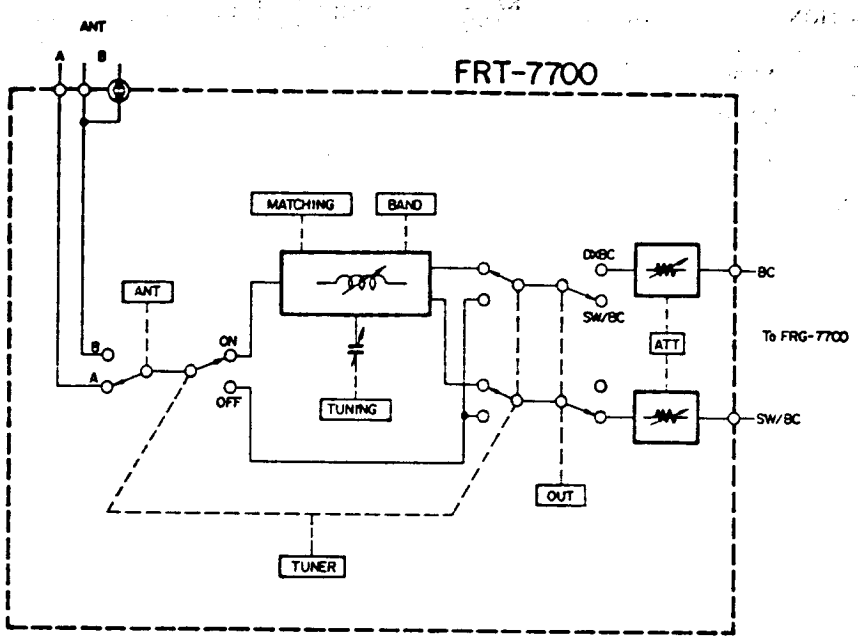

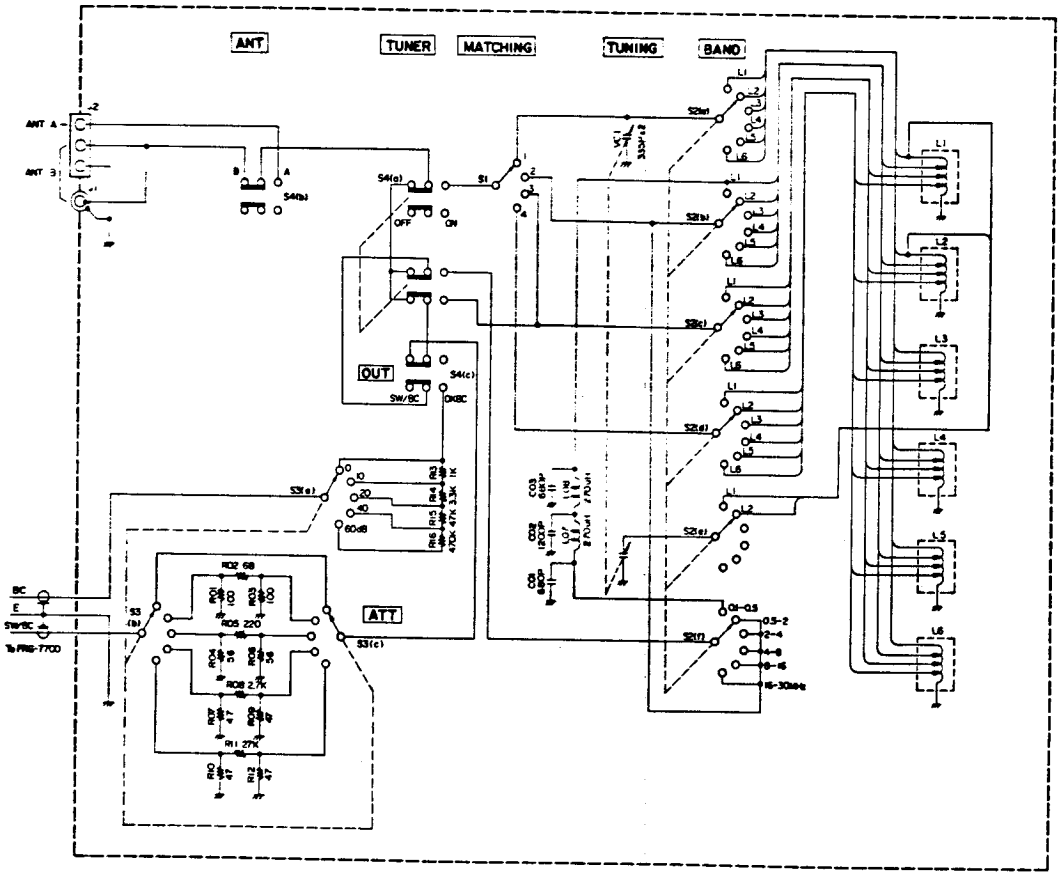

FRT-7700
CIRCUIT DIAGRAM

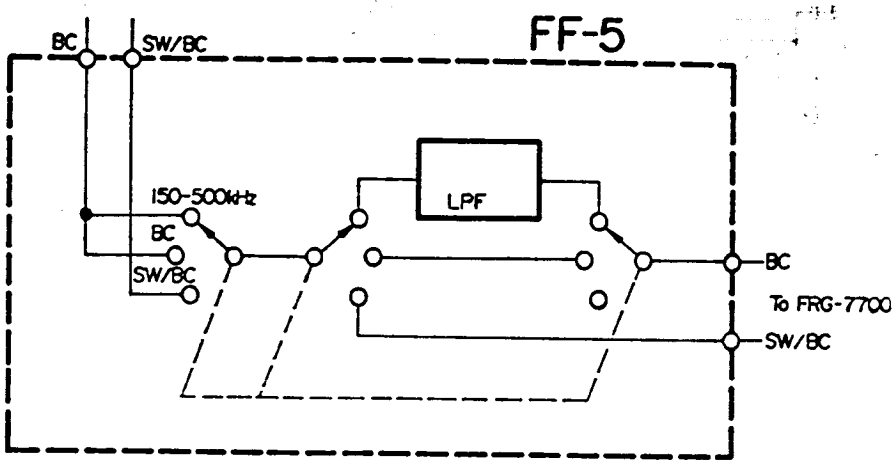

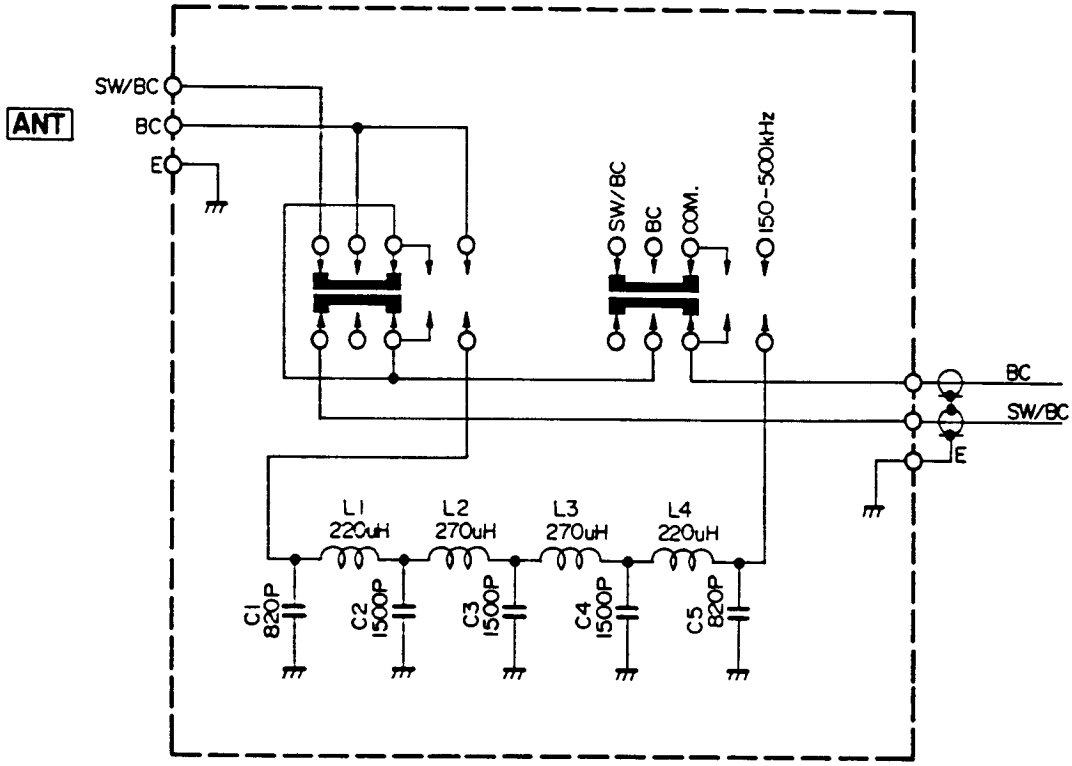

FF-5
CIRCUIT DIAGRAM

FRV-7700(A.C)

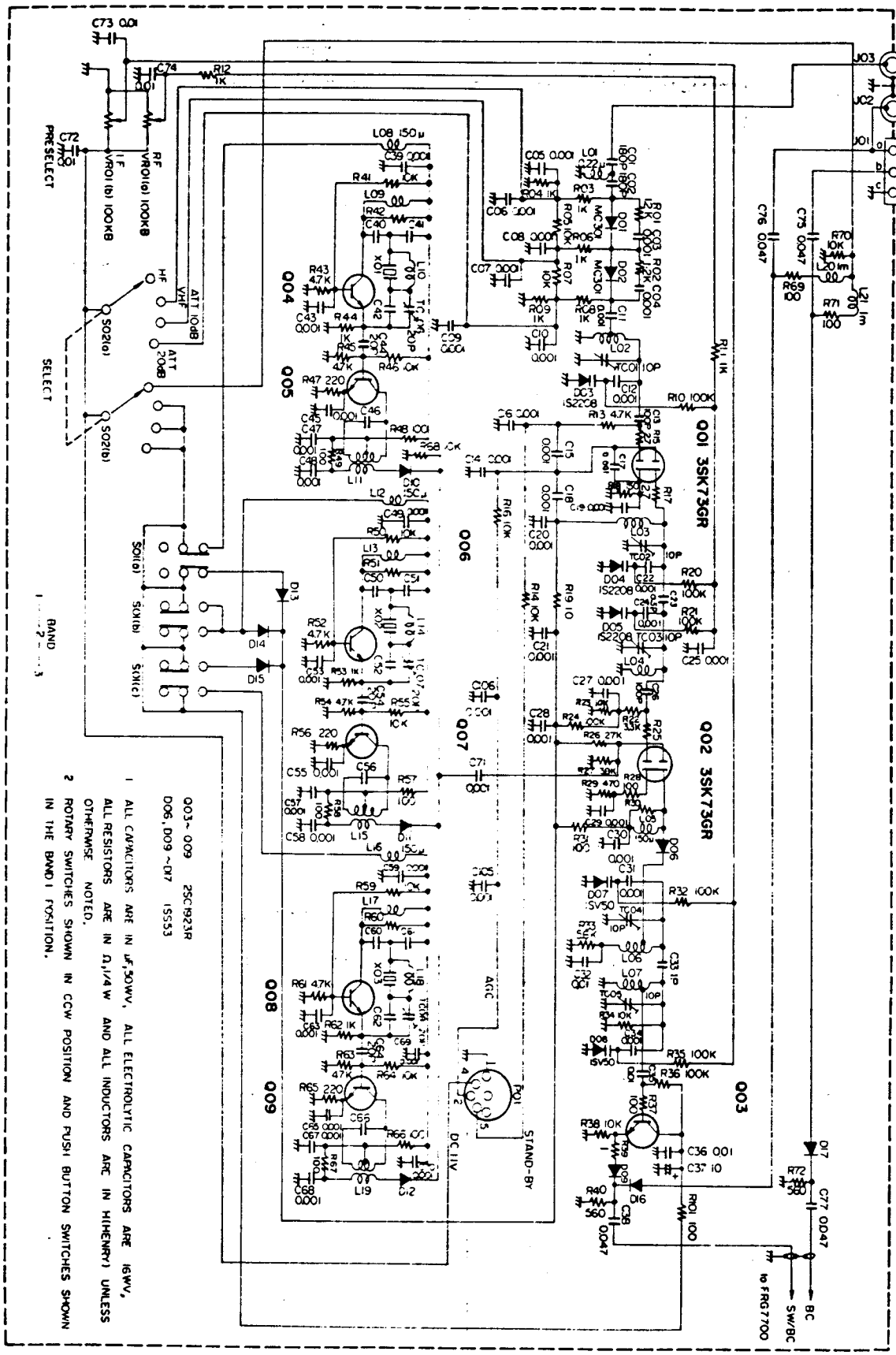

FRV-7700
CIRCUIT DIAGRAM

TYPE	A	C
X 01	100MHz	120MHz
X 02	110MHz	130MHz
X 03	120MHz	140MHz

RESISTOR	
R 25	2.7
R 30	68 K
R 42	1 K
R 51	1 K
R 60	1 K
R 10	47 K
R 11	1 K
R 12	2.2 K
R 13	2.2 K

CAPACITOR	
C 40	36P
C 41	36P
C 42	20P
C 46	24P
C 50	27P
C 51	27P
C 52	20P
C 56	20P
C 60	24P
C 61	24P
C 62	20P
C 66	16P
C 24	24P
C 23	24P
C 22	20P
C 16	16P
C 17	16P
C 20	20P
C 18	13P
C 19	15P
C 21	15P
C 28	10P

INDUCTOR	
L 10	0.33μ
L 14	0.33μ
L 18	0.33μ
L 01	0.33μ
L 02	0.22μ
L 03	0.22μ

FRV-7700(B.D)

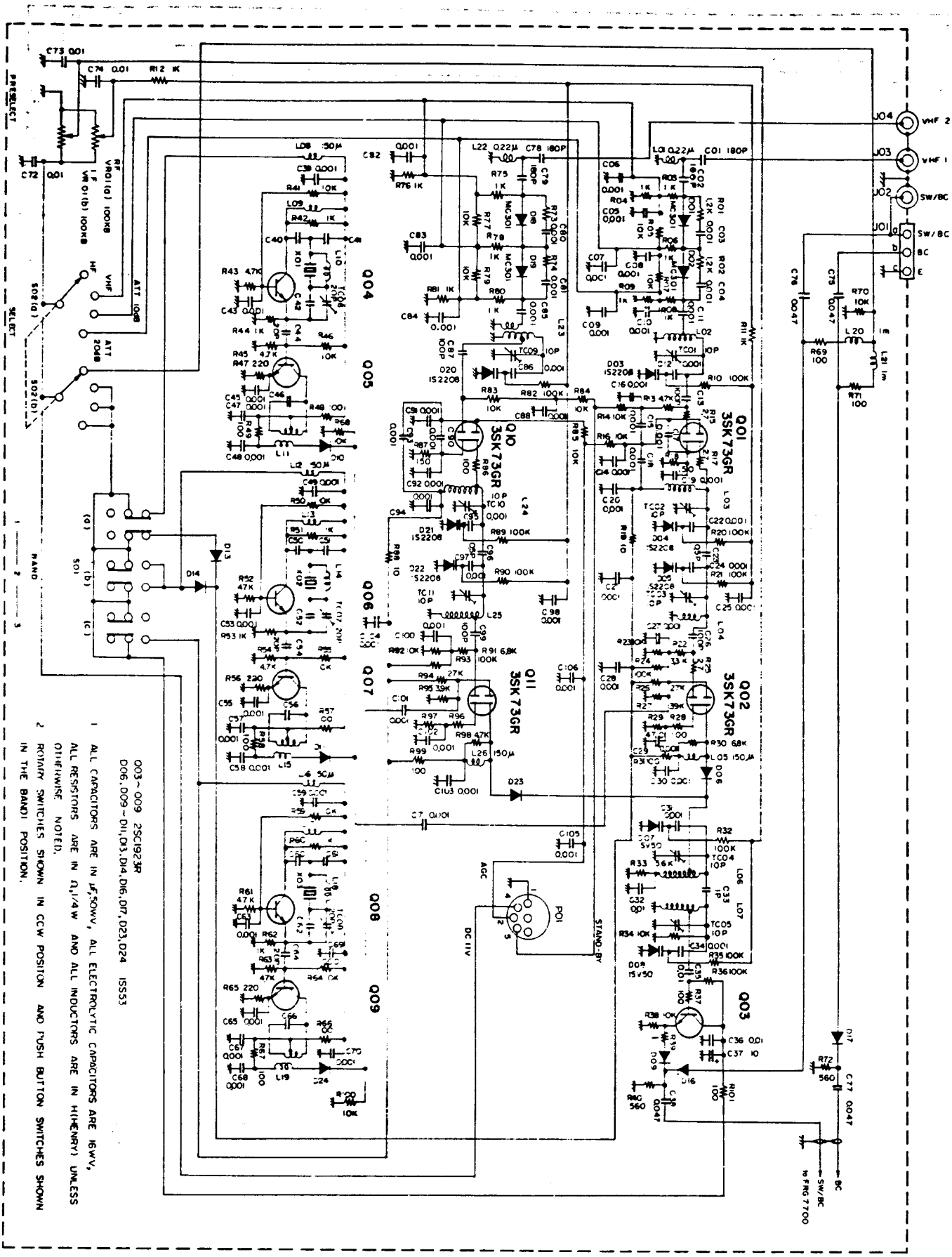

TYPE	B	D
X'TAL		
X01	100MHZ	100MHZ
X02	120 MHZ	120MHZ
X03	30MHZ	50MHZ
RESISTOR		
R73	22C	330
R74	220	1K
R96	390	220
R97	180	330
CAPACITOR		
C40	36P	36P
C41	36P	36P
C42	20P	20P
C46	24P	24P
C50	24P	24P
C51	[illegible]	[illegible]
C52	20P	20P
C56	16P	16P
C60	15P	15P
C61	15P	15P
C62	20P	20P
C66	36P	12P
INDUCTOR		
L10	0.33μ	0.33μ
L14	0.33μ	0.33μ
L18	4.7μ	1.8μ

FRV-7700
CIRCUIT DIAGRAM

FRV-7700(E.F)

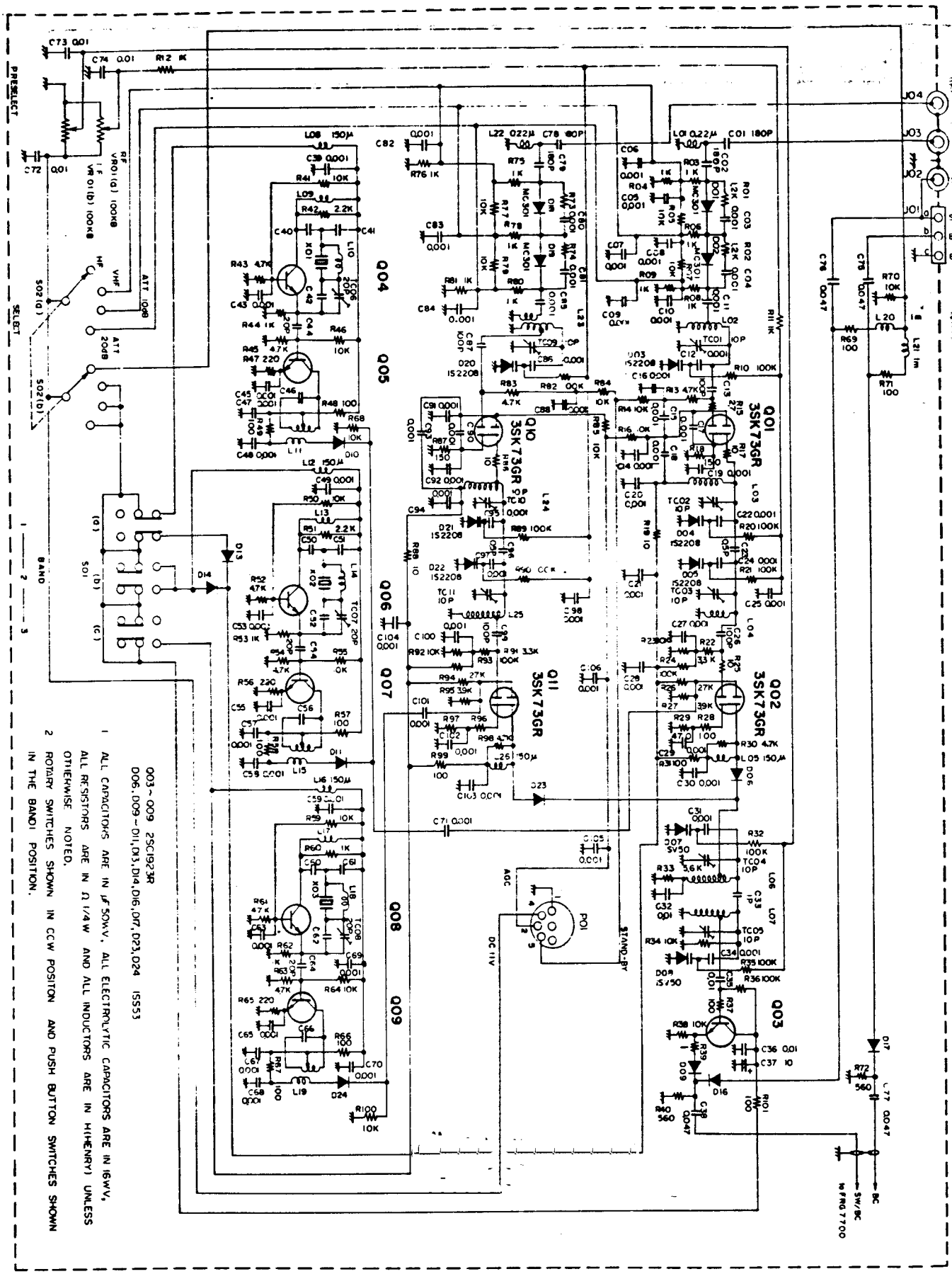

TYPE	E	F
X TAL		
X01	120MHZ	130MHZ
X02	130 MHZ	140MHZ
X03	100MHZ	100MHZ
RESISTOR		
R73	1.2K	1.2K
R74	1.2K	1.2K
R96	100	100
R97	470	470
CAPACITOR		
C40	24 P	16 P
C41	24 P	16 P
C42	20 P	20 P
C46	16 P	13 P
C50	16 P	15 P
C51	16 P	15 P
C52	20 P	20 P
C56	13 P	10 P
C60	36 P	36 P
C61	36 P	36 P
C62	20 P	20 P
C66	24 P	24 P
INDUCTOR		
L10	0.22 μ	0.22 μ
L14	0.22 μ	0.22 μ
L18	0.33 μ	0.33 μ

FRV-7700
CIRCUIT DIAGRAM

FRA-7700

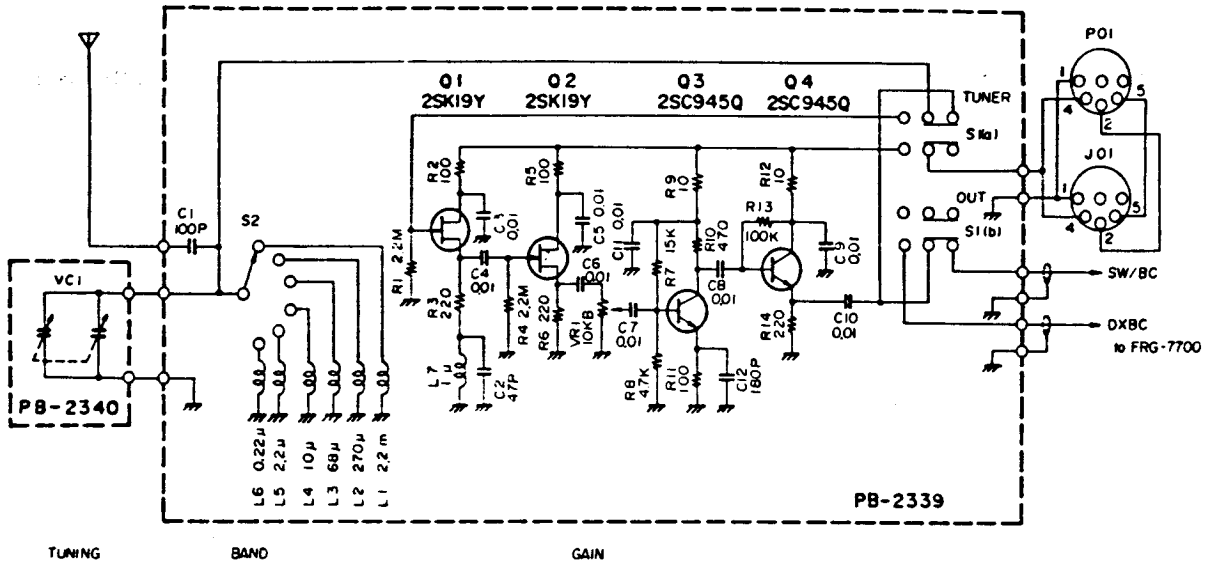

1. ALL CAPACITORS ARE IN μF 50WV, ALL RESISTORS ARE IN Ω 1/4W, ALL INDUCTORS ARE IN H(HENRY), UNLESS OTHERWISE NOTED.
2. ROTARY SWITCH IS SHOWN IN CCW POSITION AND PUSH BUTTON SWITCHES ARE SHOWN IN THE RELEASED POSITION.

FRA – 7700
CIRCUIT DIAGRAM

MODIFICATIONS

DC POWER SUPPLY OPERATION (DC KIT INSTALLATION)

A. **Required Parts (included w/kit)**

1 pc.	C5300842	DC Jack Assembly
1 pc.	P1090139	DC Plug
2 pcs.	U00107007	Screws
2 pcs.	U60001001	Nut
2 pcs.	U71050001	Spring Washer

B. **Modification Procedure**

1. Remove the handle mounted on the right side of the cabinet.
2. Remove the six screws retaining the bottom cover and carefully set the panel to one side.
3. Disconnect the battery clip connected to the backup battery case.
4. Remove the four plastic pins that are fastened to the rear panel terminal board, as shown in Figure 2-1.
5. Grasp the terminal board and remove the small plastic cover to expose the DC Jack cutout, as shown in Figure 2-2.
6. Install the DC Jack assembly as shown in Figure 2-3.
7. Re-install the terminal board with the four plastic pins.
8. Insert plug P_{40} into Jack J_2 as shown in Figure 2-4.
9. Reconnect the battery clip to the backup battery case, and replace the bottom cover, re-installing the six screws removed in Step 2.
10. The DC power cord may now be wired as shown in Figure 2-5. A supply capable of providing 13.5 volts DC at 1.2 amp (min.) is required.

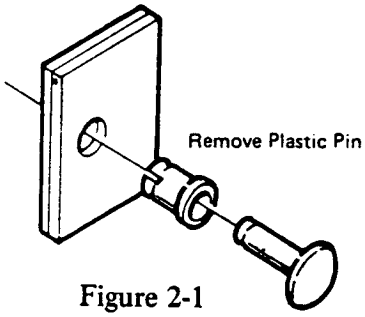

Figure 2-1

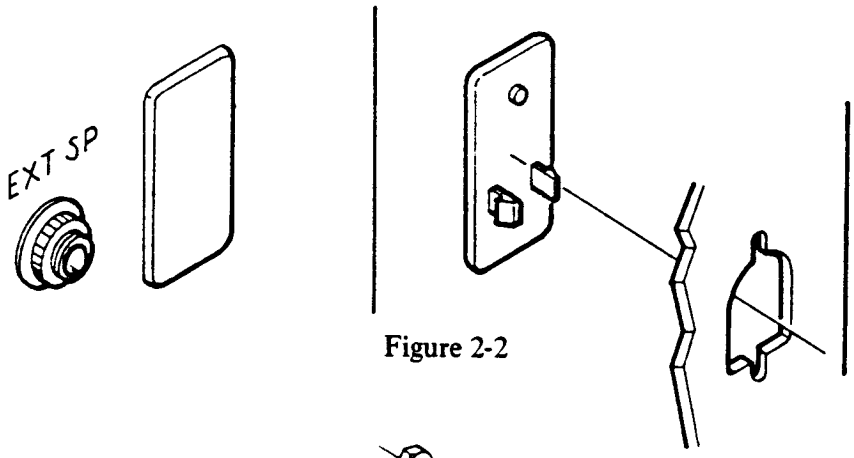

Figure 2-2

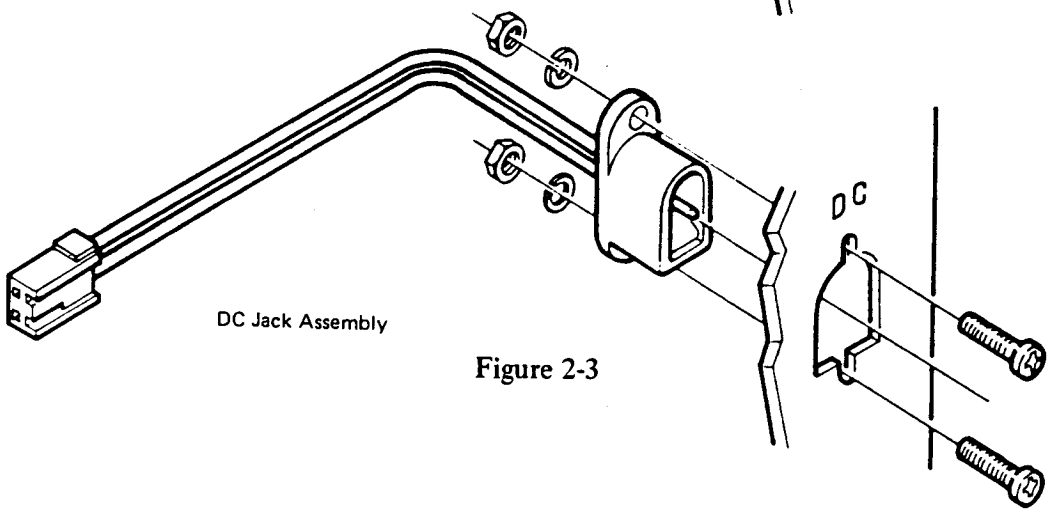

Figure 2-3

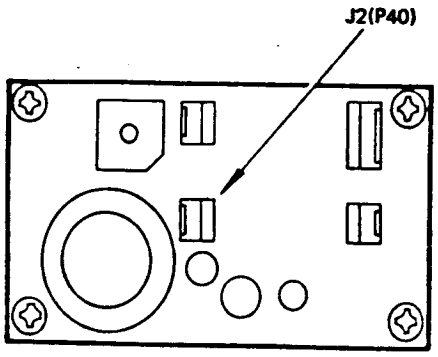

Figure 2-4

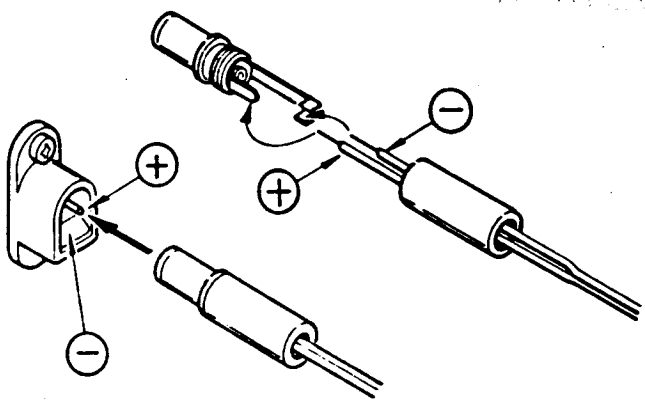

Figure 2-5

MEMORY FREQUENCY 1kHz ERROR

The following modification will correct the 1 kHz error in frequencies recalled from the memory function. It will also eliminate the audible beat occuring during memory operation.

Parts Needed

1N60 germanium diode	2 pcs.
1/4 watt 3.3Kohms resistor	1 pce.

Modification Procedure

1. Cut the upper pattern on PB-2175, as shown in Figure 2-6.

2. Install and solder the two 1N60 diodes and the 3.3 Kohm resistor as shown in Figure 2-6.

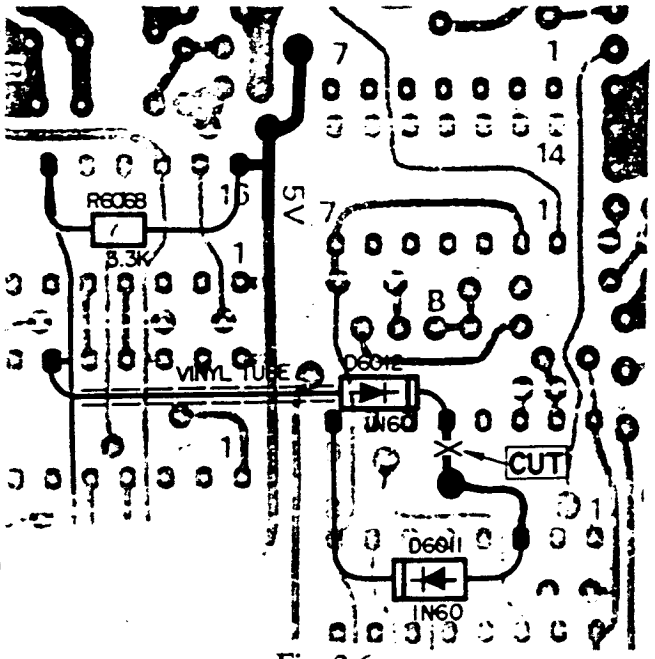

Fig. 2-6

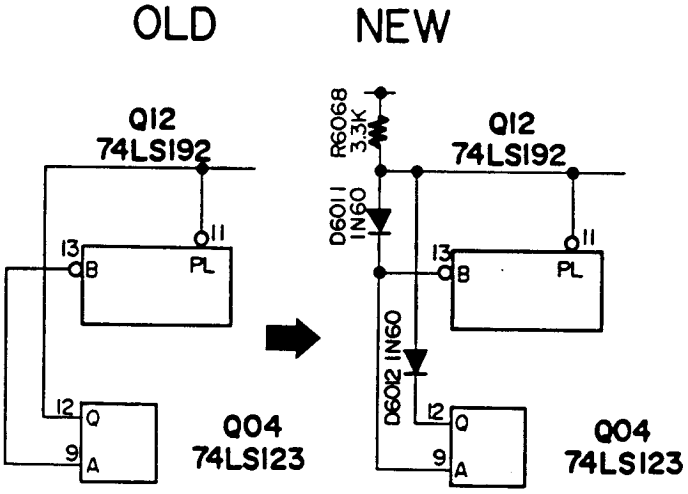

Fig. 2-7

PERFORMANCE IMPROVEMENT FOR EARLY MODEL

This modification will provide additional power switch protection against rush current that occurs when the power switch is turned on. Please be advised that the IC MC 14504 (lot number "7944", Fig. 2-8) has been reported by the supplier as defective, and must be replaced.

MODIFICATION PROCEDURE

1) Remove the carrying handle on the left side of the receiver, then the top cover, and finally the bottom cover.
2) Remove all connectors on the PLL unit.
3) Remove the band switch knob and unscrew the nut securing the band switch, from the outside of the receiver.
4) Remove the eight screws on the PLL unit, and take the PLL unit out of its chassis.
5) Cut all the pins of Q_{2038} from the component side, and unsolder the pins, as shown in Fig. 2-9.
6) Install the new MC 14504 in the correct position, and solder its pins.
7) Replace the PLL unit in its chassis with the eight screws previously removed. Secure the band switch and the band switch knob into place.
8) Reconnect all connectors removed from the PLL unit in step 2.

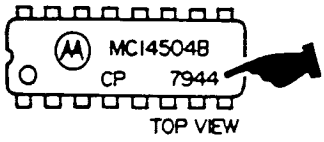

Figure 2-8

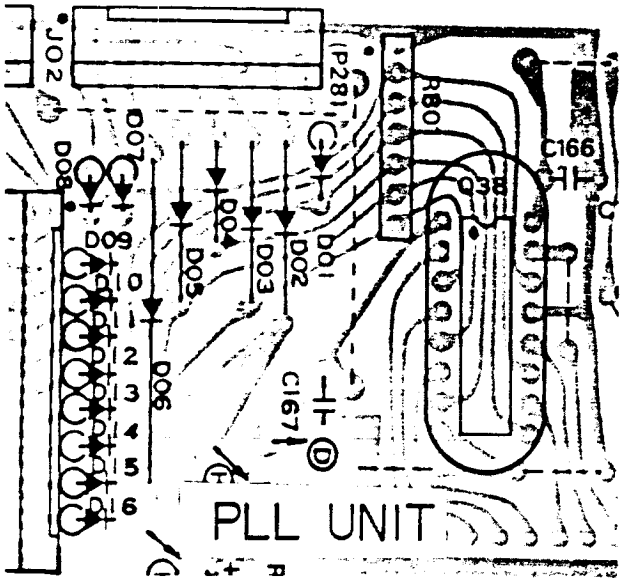

Figure 2-9

9) Disconnect P_{01}, P_{05}, P_{13} and P_{15} on the main unit from their jacks, and remove the eight screws from the main unit.
10) Tilt the main unit toward the front panel, in order to expose the solder side of the board.
11) Unsolder the cathode of D_{1034} from the pattern, and pull the lead from the component side, as shown in Fig. 2-10.
12) Insert through the hole and solder one lead of a 1/2 W, 6.8 (or 5.6) ohm resistor to the point where the cathode of D_{1034} was removed.
13) Solder the other lead of the resistor to the cathode lead of D_{1034} on the component side, as shown in Fig. 2-11.
14) Replace all connectors previously removed from the main unit.
15) Secure the main unit back on to the chassis with the eight screws.
16) Close the receiver by replacing the top cover, bottom cover, and then the carrying handle.

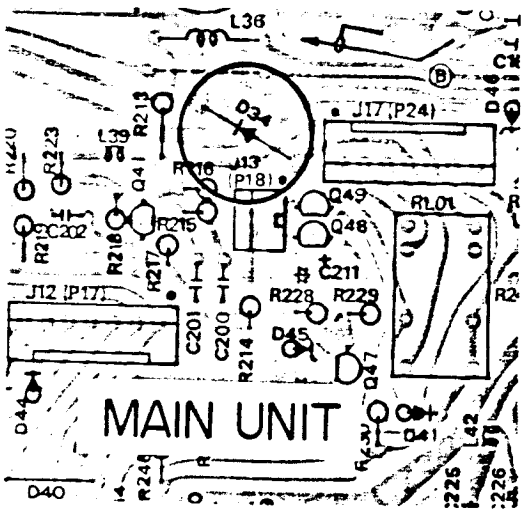

Figure 2-10

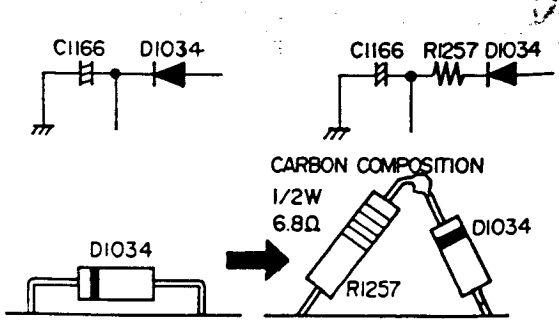

Figure 2-11

SECTION 3—SERVICING

FRONT PANEL REMOVAL

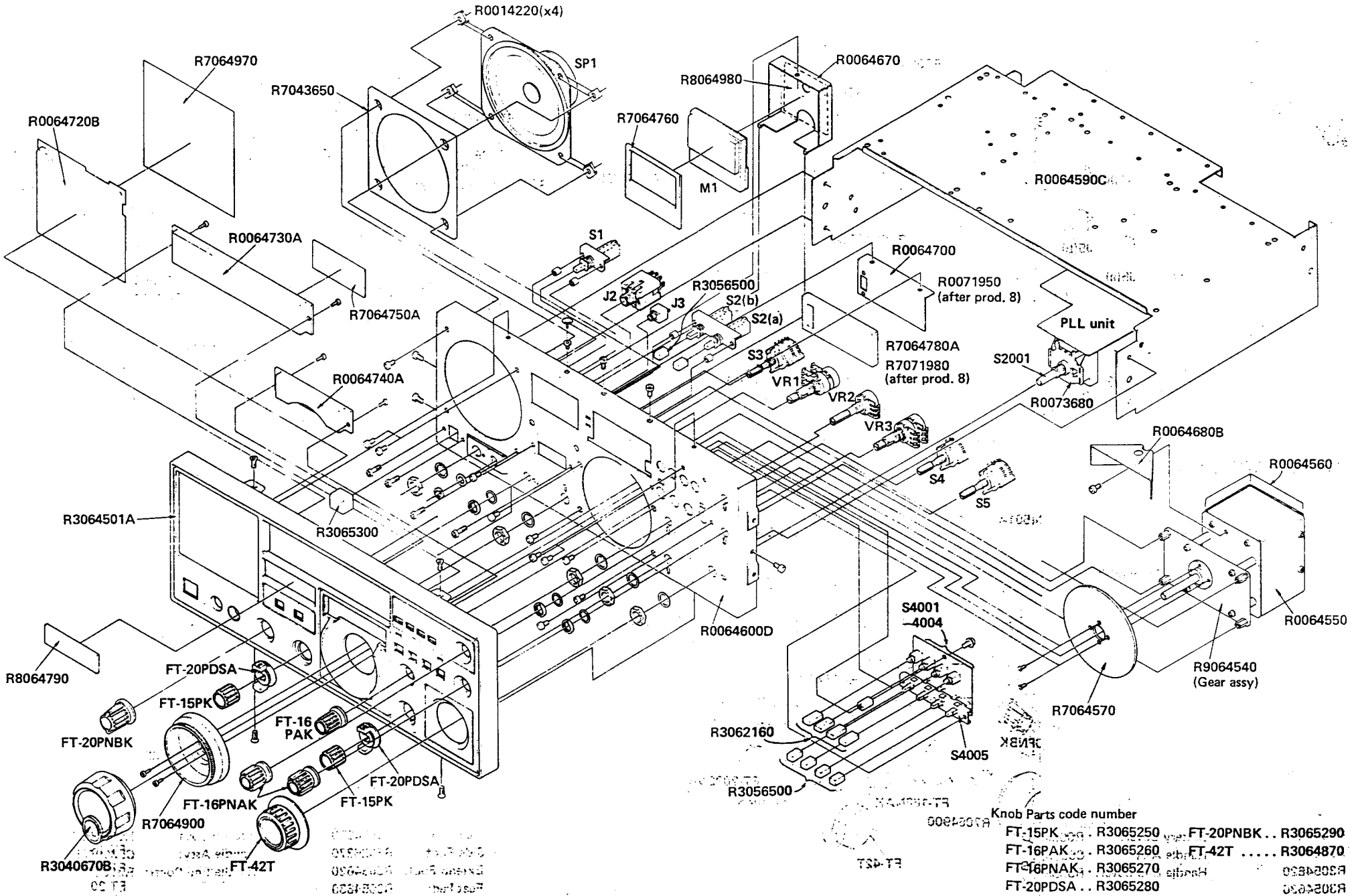

Knob Parts code number

FT-15PK	R3065250	FT-20PNBK	R3065290
FT-16PAK	R3065260	FT-42T	R3064870
FT-16PNAK	R3065270		
FT-20PDSA	R3065280		

PARTS LAYOUT MAIN UNIT(PB-2169)

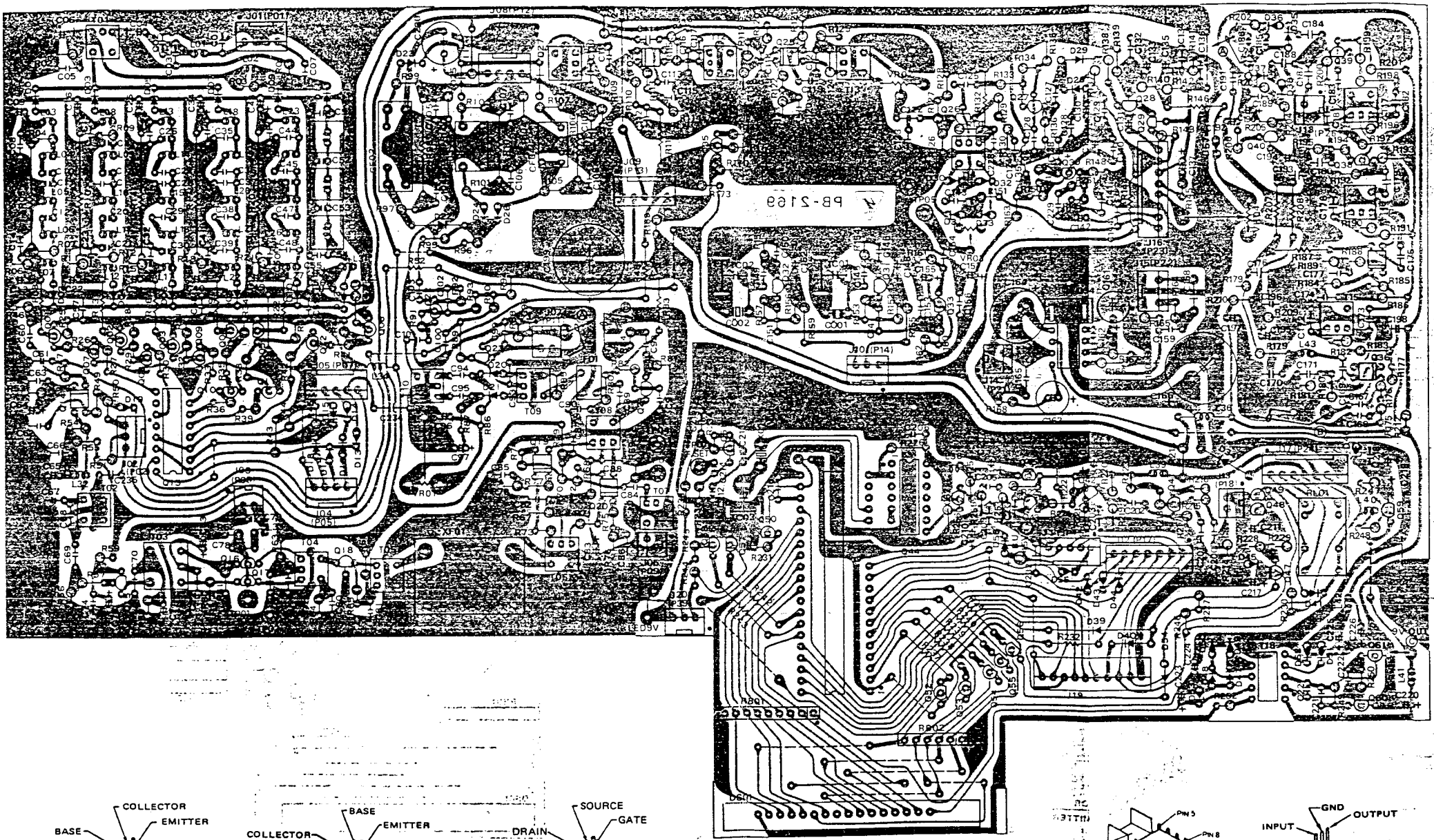

Viewed from component side

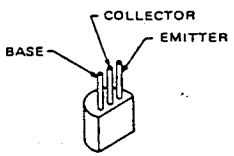

2SA733
2SC945
2SC1384
2SC1674L

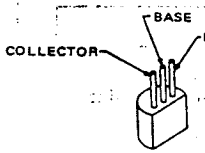

MPS-A13

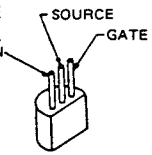

2SK125

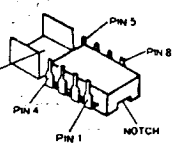

μPC575C2

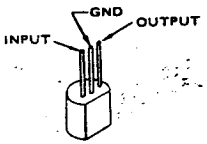

78L05/08

FRG-7700

CIRCUIT DIAGRAM

1 ALL CAPACITORS ARE IN μF, 50WV, ALL ELECTROLYTIC CAPACITORS ARE 16WV. ALL RESISTORS ARE IN Ω, 1/4W, AND ALL INDUCTORS ARE IN MH(MILLIHENRY) UNLESS OTHERWISE NOTED.

2 ALL ROTARY SWITCHES SHOWN IN CCW POSITION WITHOUT MCH SWITCH, AND ALL PUSH BUTTON SWITCHES SHOWN IN THE RELEASED POSITION.

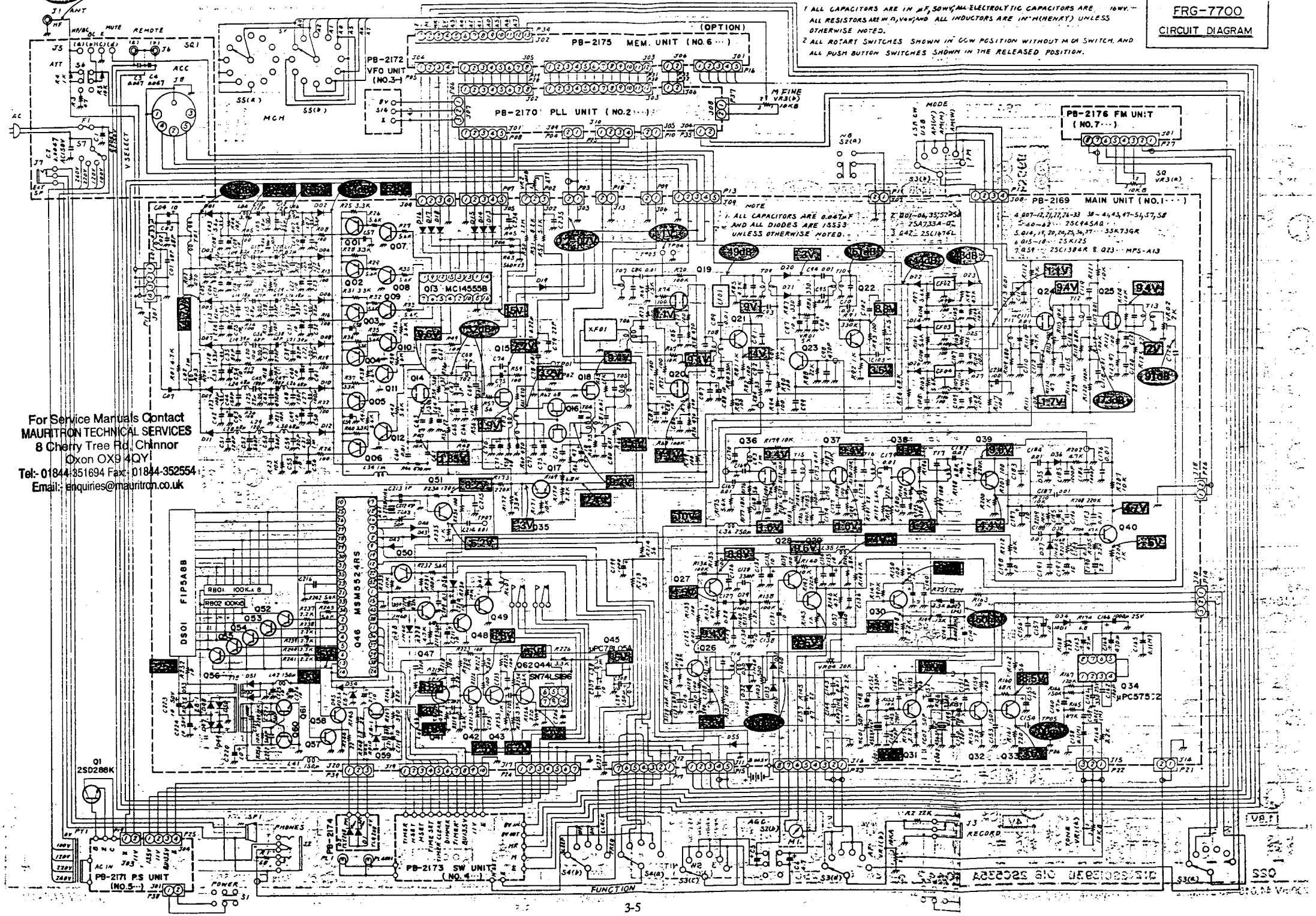

PARTS LAYOUT PLL UNIT(PB-2170)

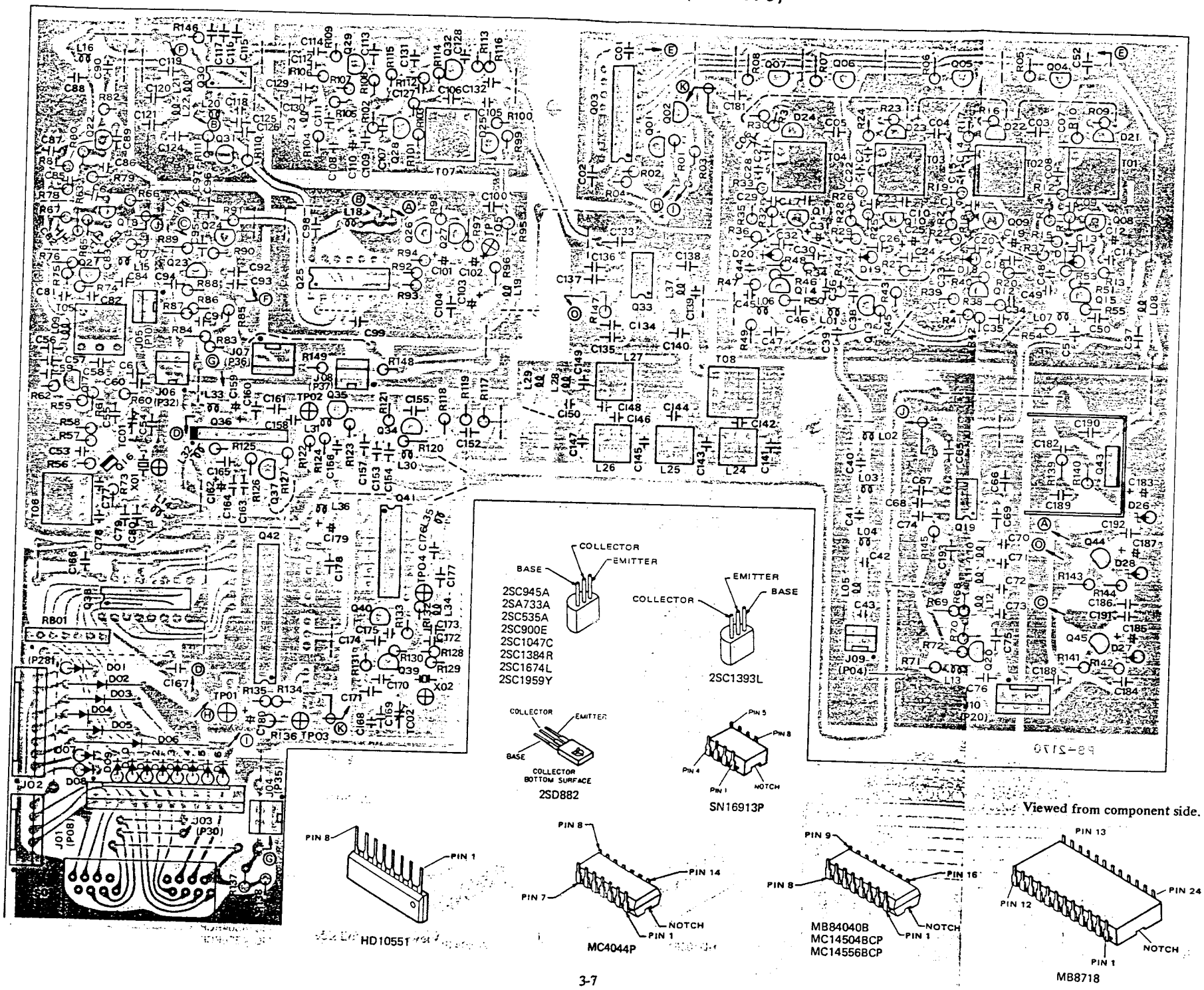

Viewed from component side.

BOARD LAYOUT

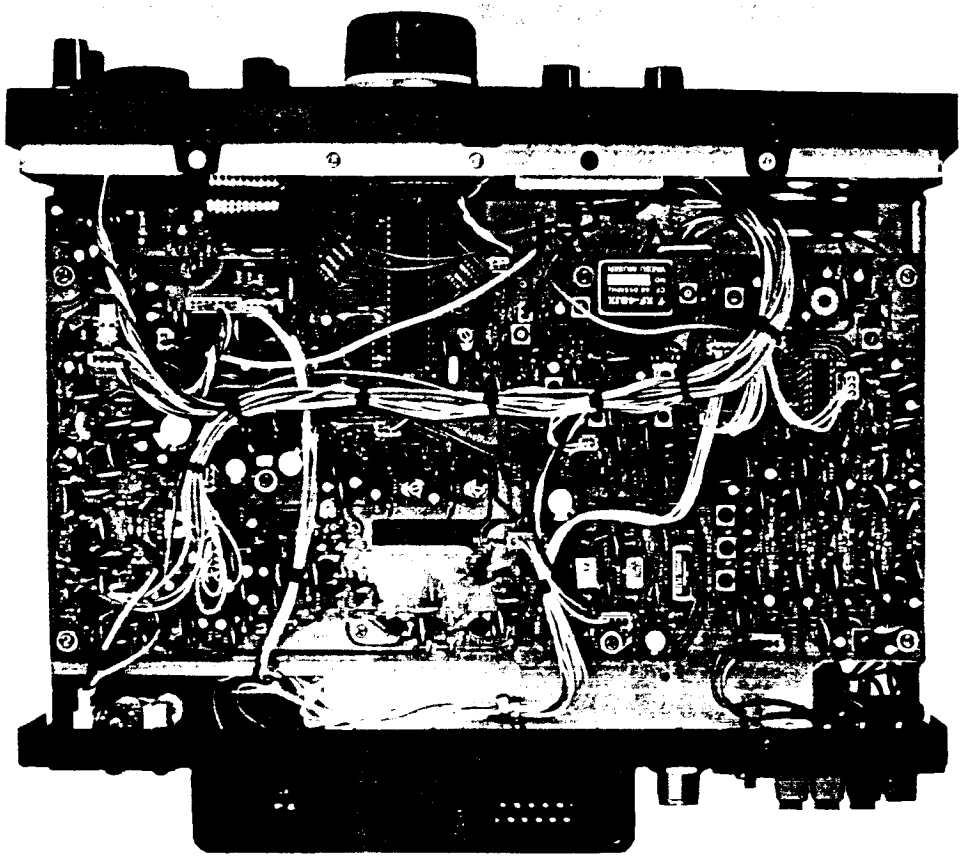

Top View

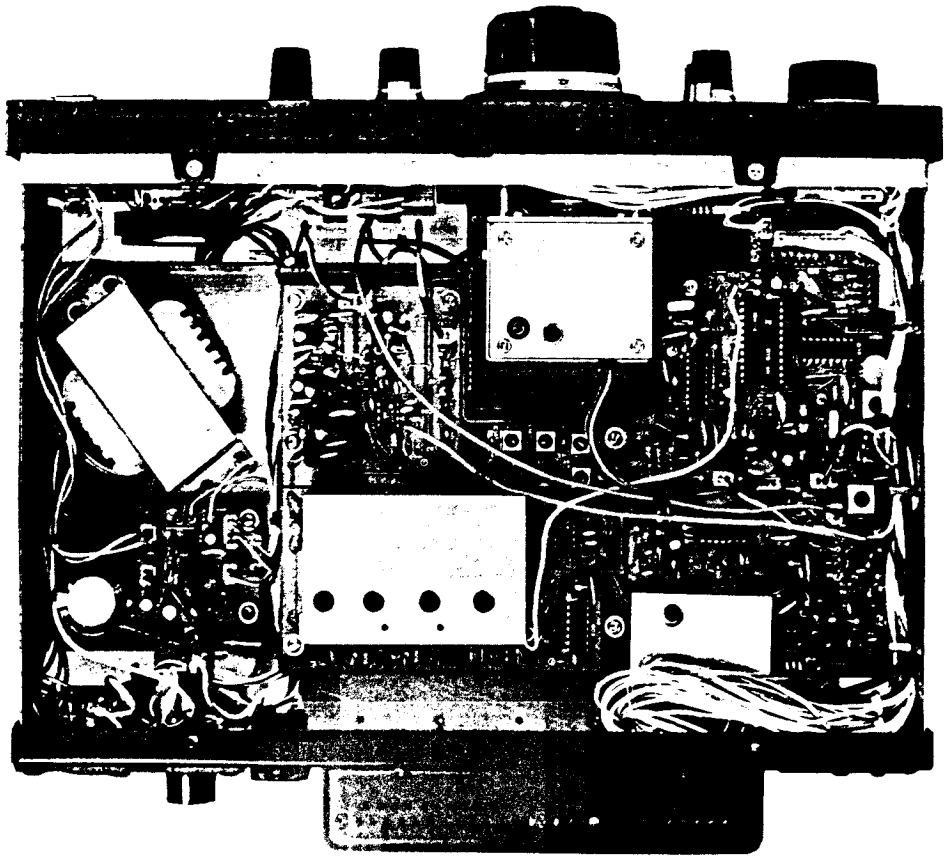

Bottom View

VFO UNIT PARTS LAYOUT

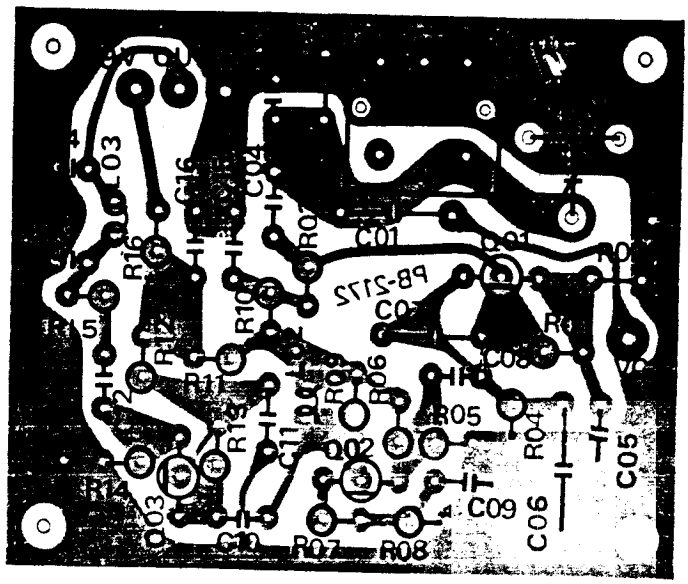

Viewed from component side

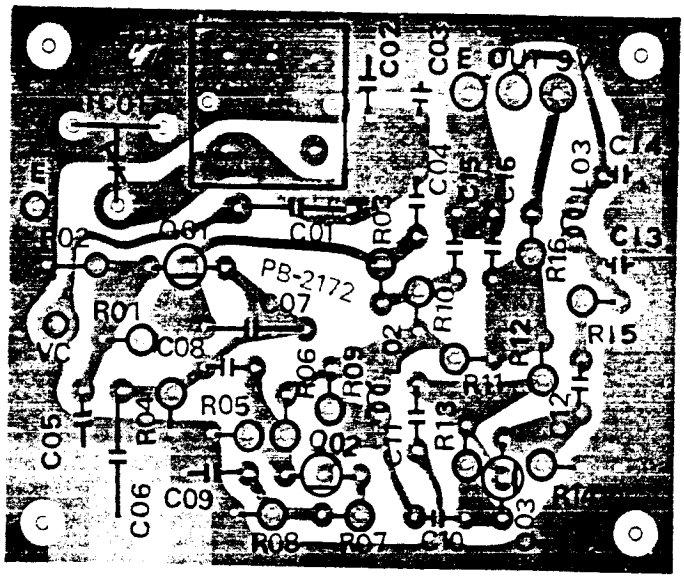

Viewed from solder side

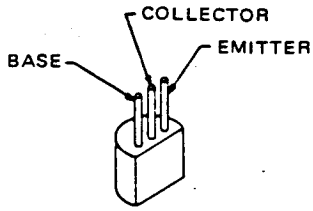

2SC945A

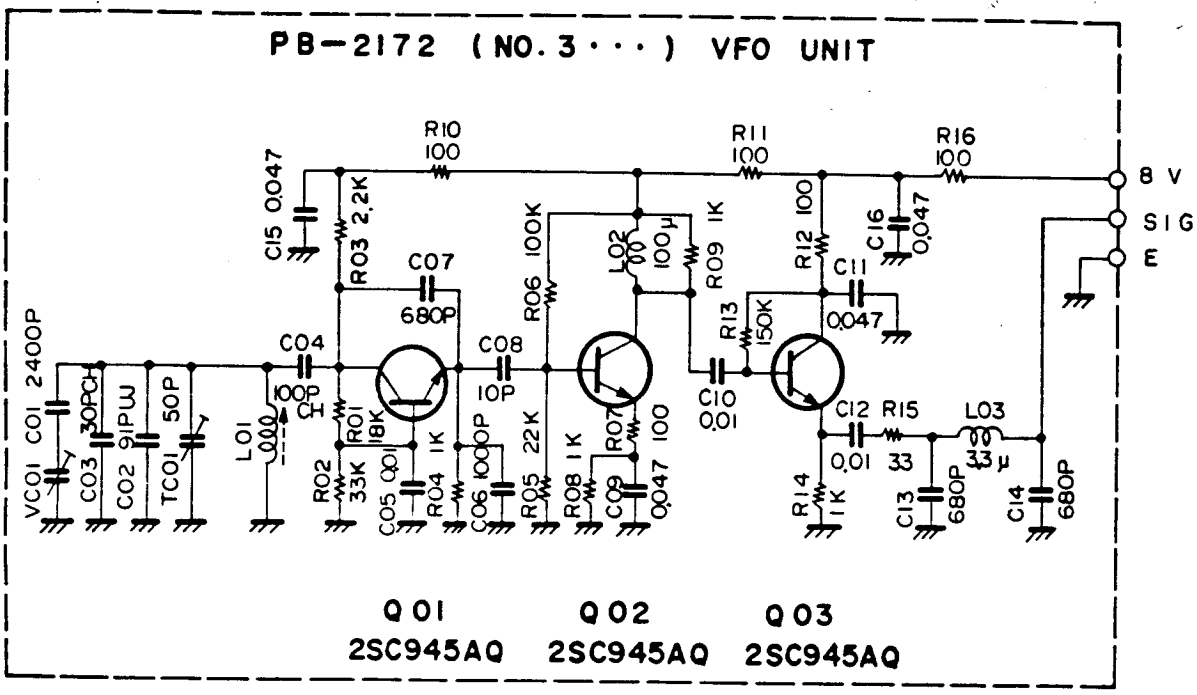

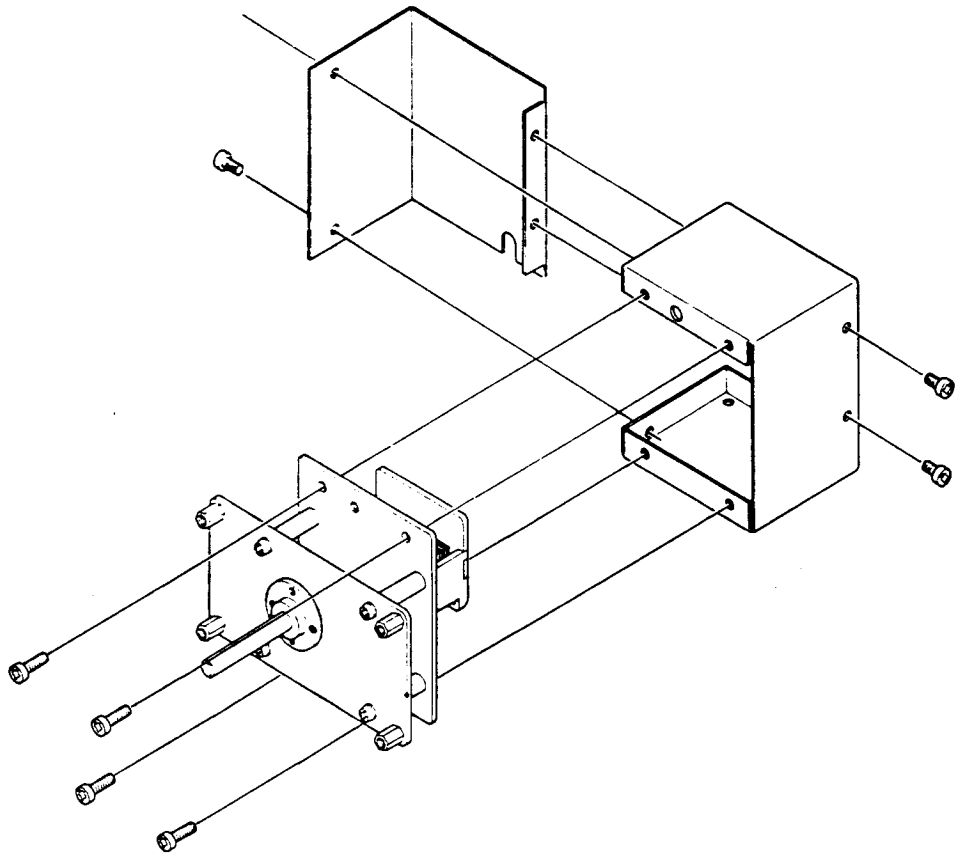

FM UNIT PARTS LAYOUT

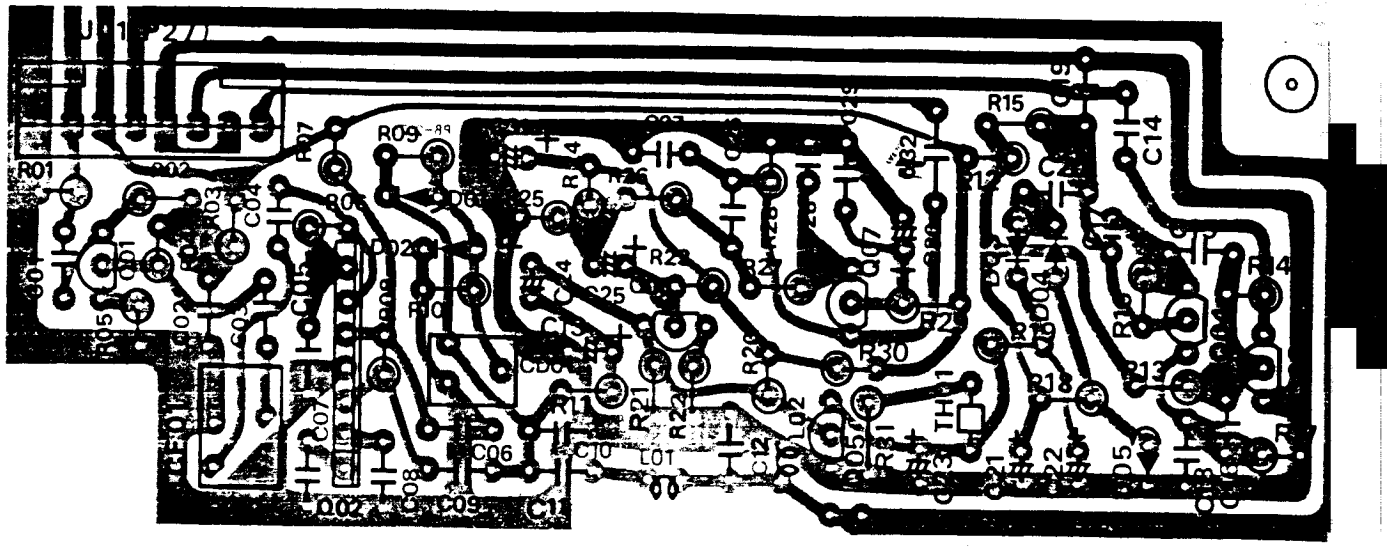

Viewed from component sid

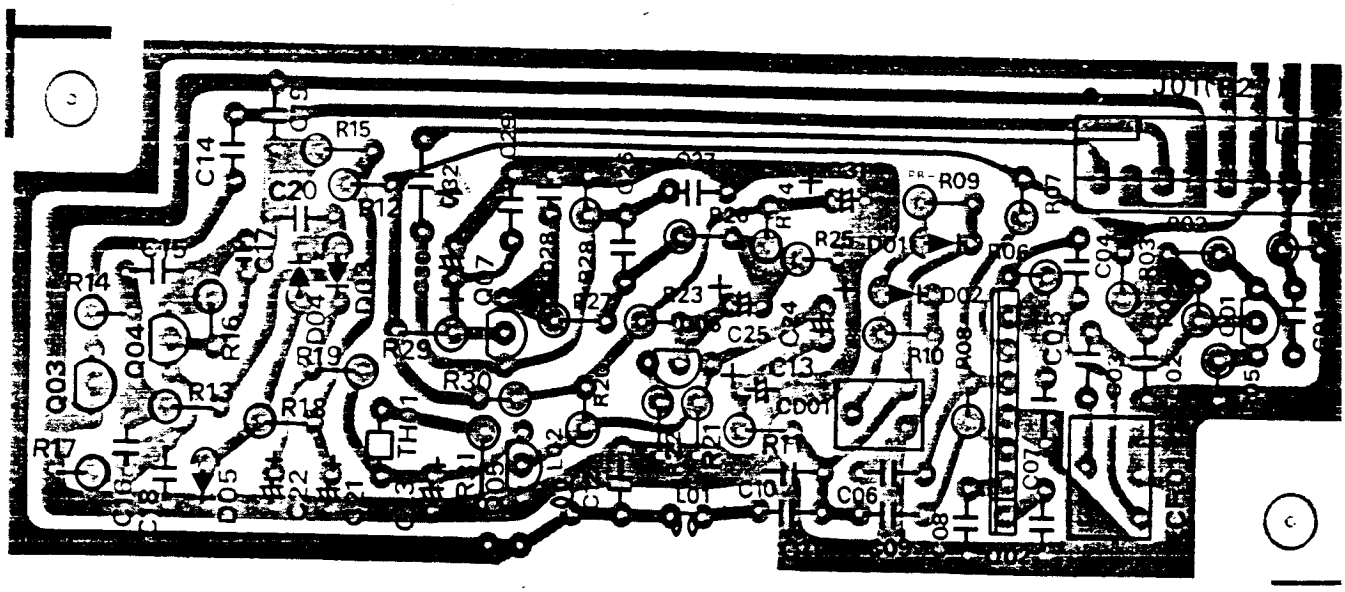

Viewed from foil side

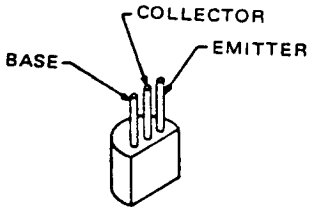

2SC945A

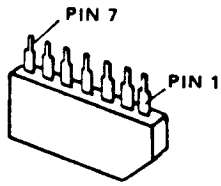

TA-7061AP

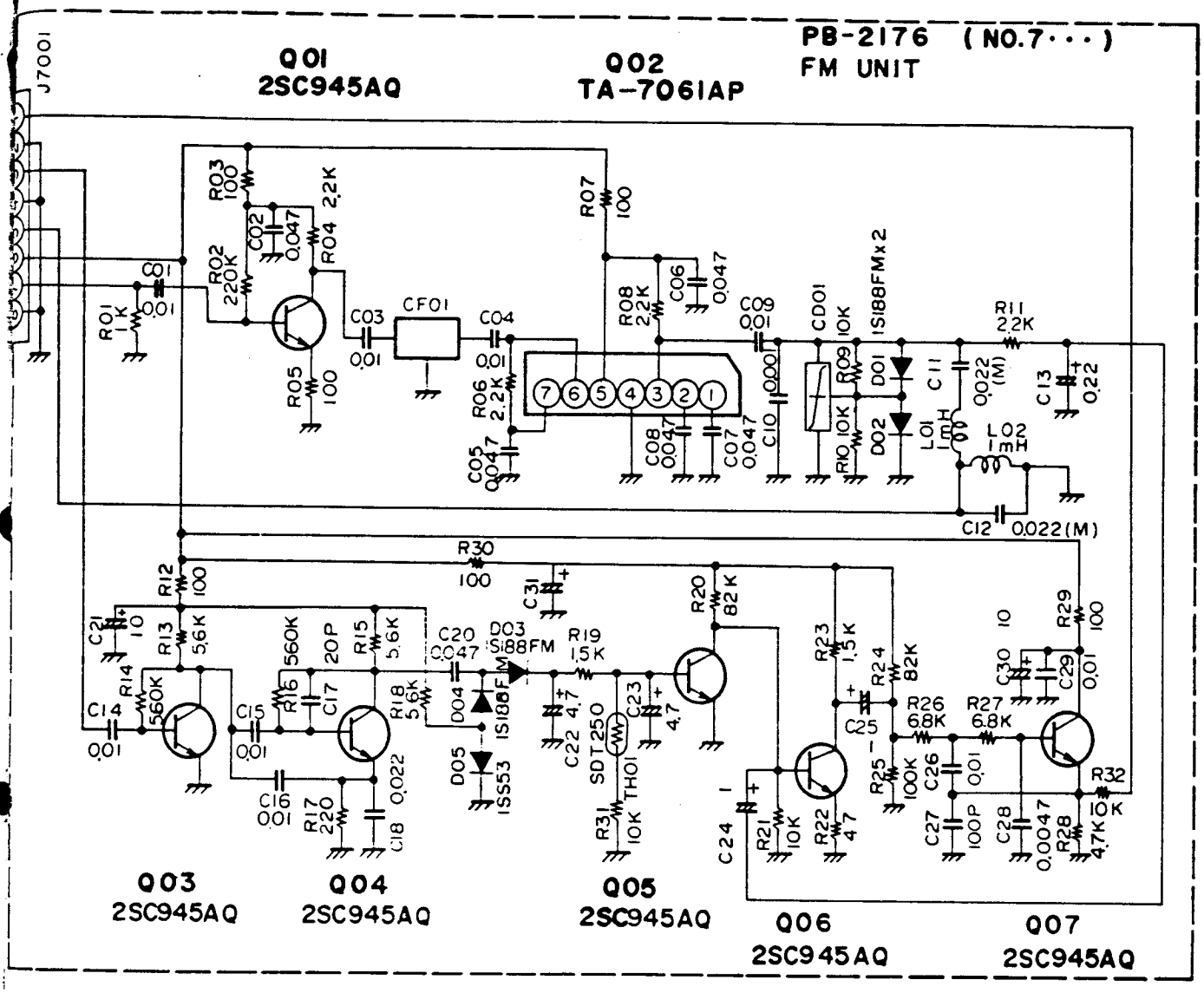
PB-2176 (NO.7···)
FM UNIT
J7001
Q01
2SC945AQ
Q02
TA-7061AP
R03 100
C02 0.047
R04 2.2K
R02 220K
R01 1K
C01 0.01
R05 100
C03 0.01
CF01
C04 0.01
R06 2.2K
C05 0.047
R07 100
R08 2.2K
C06 0.047
C08 0.047
C07 0.047
C09 0.01
C10 0.001
CD01
R09 10K
R10 10K
1S188FMx2
D01
D02
C11 0.022 (M)
L01 1mH
L02 1mH
R11 2.2K
C13 0.22
C12 0.022(M)
R30 100
R12 100
C31
C21 10
R13 5.6K
R14 560K
C14 0.01
Q03
2SC945AQ
560K
C15 0.01
R16 560K
C17 20P
R15 5.6K
R18 5.6K
C16 0.01
R17 220
C18 0.022
Q04
2SC945AQ
C20 0.047
D03 1S188FM
D04 1S188FM
D05 1SS53
R19 1.5K
C22 4.7
SDT250
THO1
C23 4.7
R31 10K
Q05
2SC945AQ
R20 82K
R23 1.5K
R24 82K
C25
R25 100K
R26 6.8K
R27 6.8K
C26 0.01
C27 100P
C28 0.0047
R28 4.7K
C24 1
R21 10K
R22 47
Q06
2SC945AQ
C30 10
C29 0.01
R29 100
R32 10K
Q07
2SC945AQ

POWER SUPPLY UNIT PARTS LAYOUT

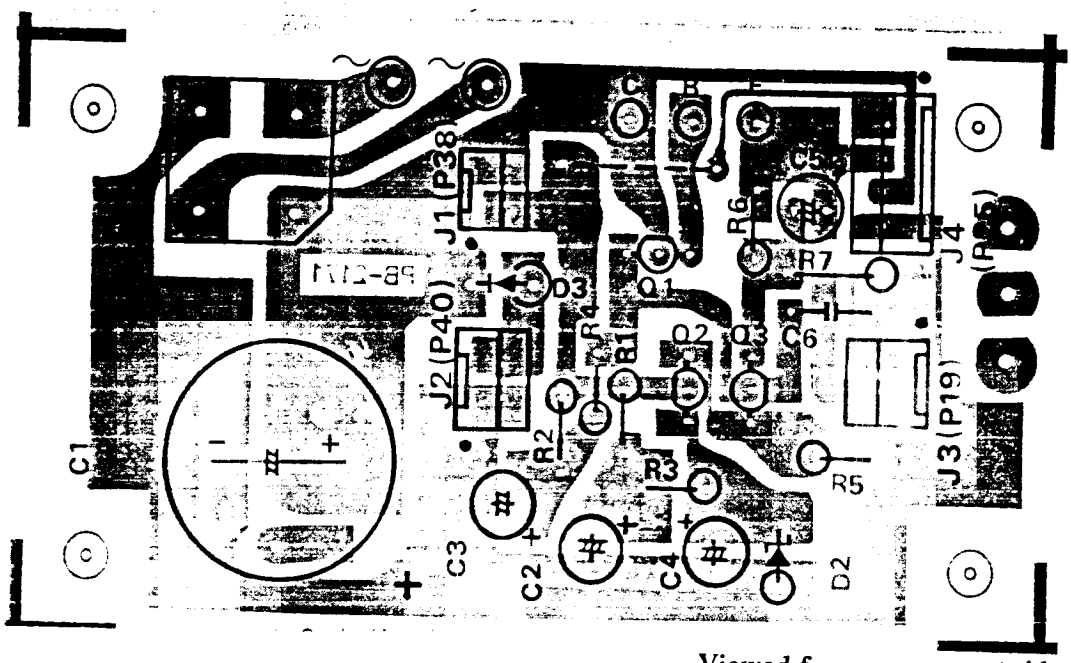

Viewed from component side

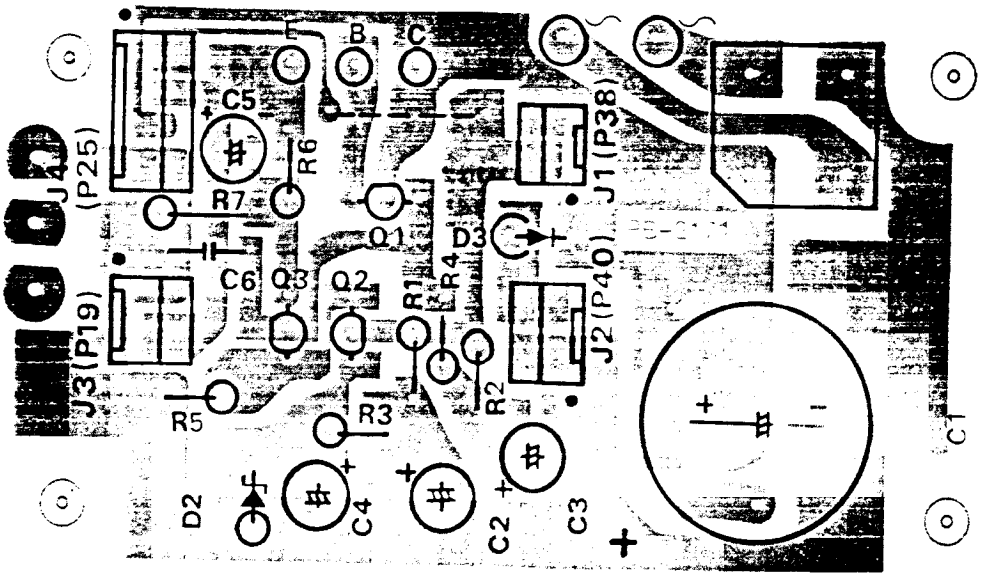

Viewed from foil side

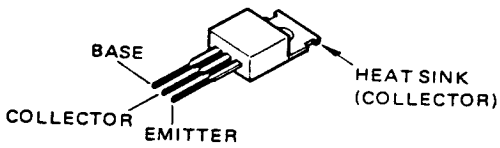

2SD288K

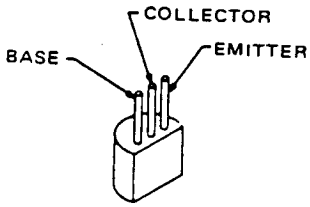

2SC945A

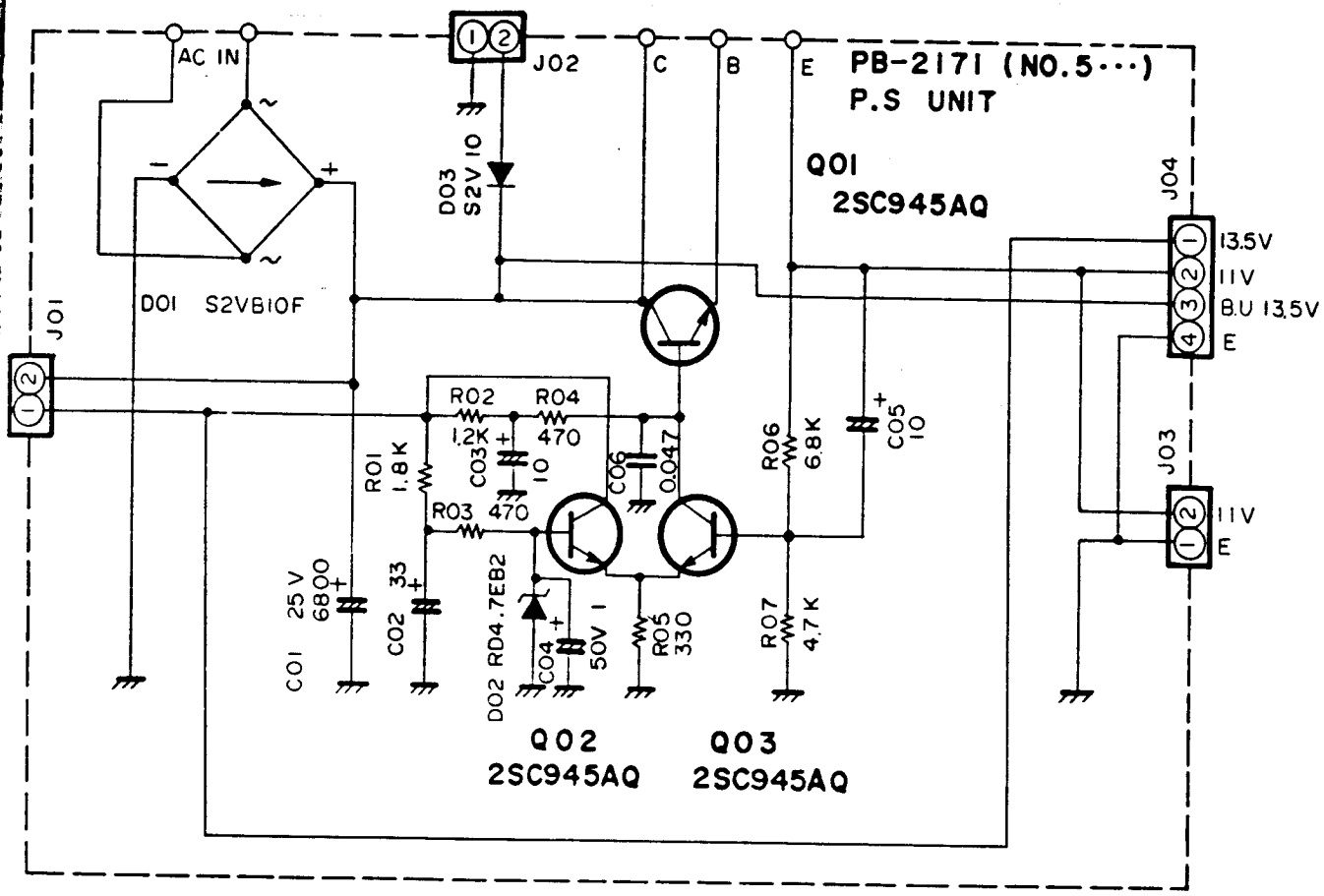

SWITCH UNIT PARTS LAYOUT

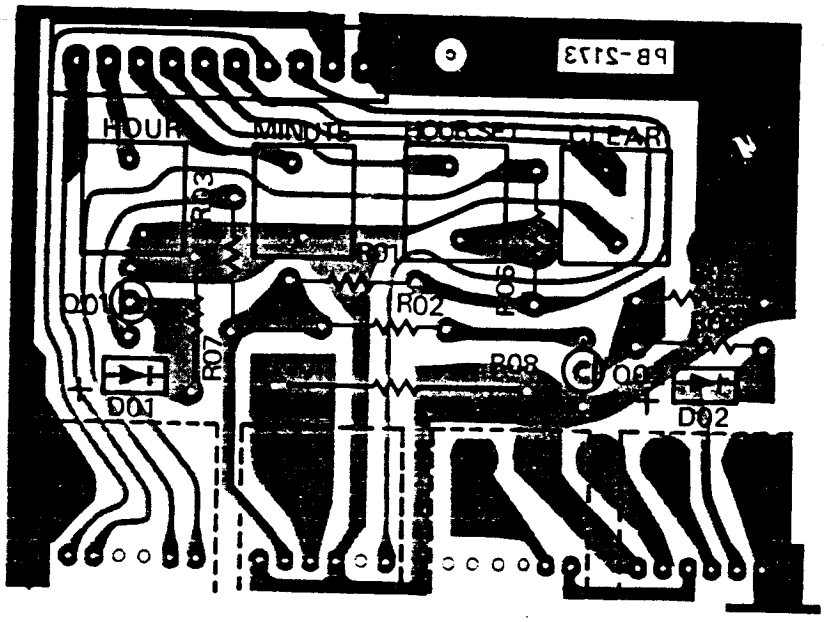

Viewe d from component side

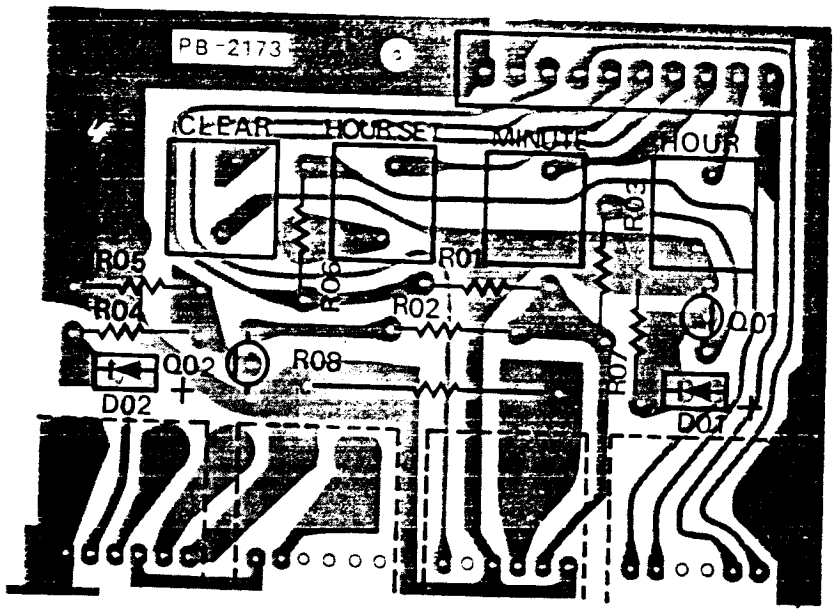

Viewed from foil side

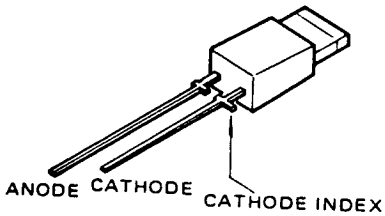

TLY205

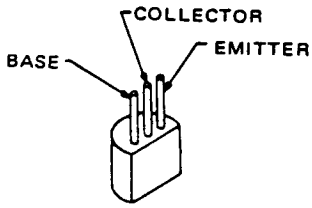

2SC945A

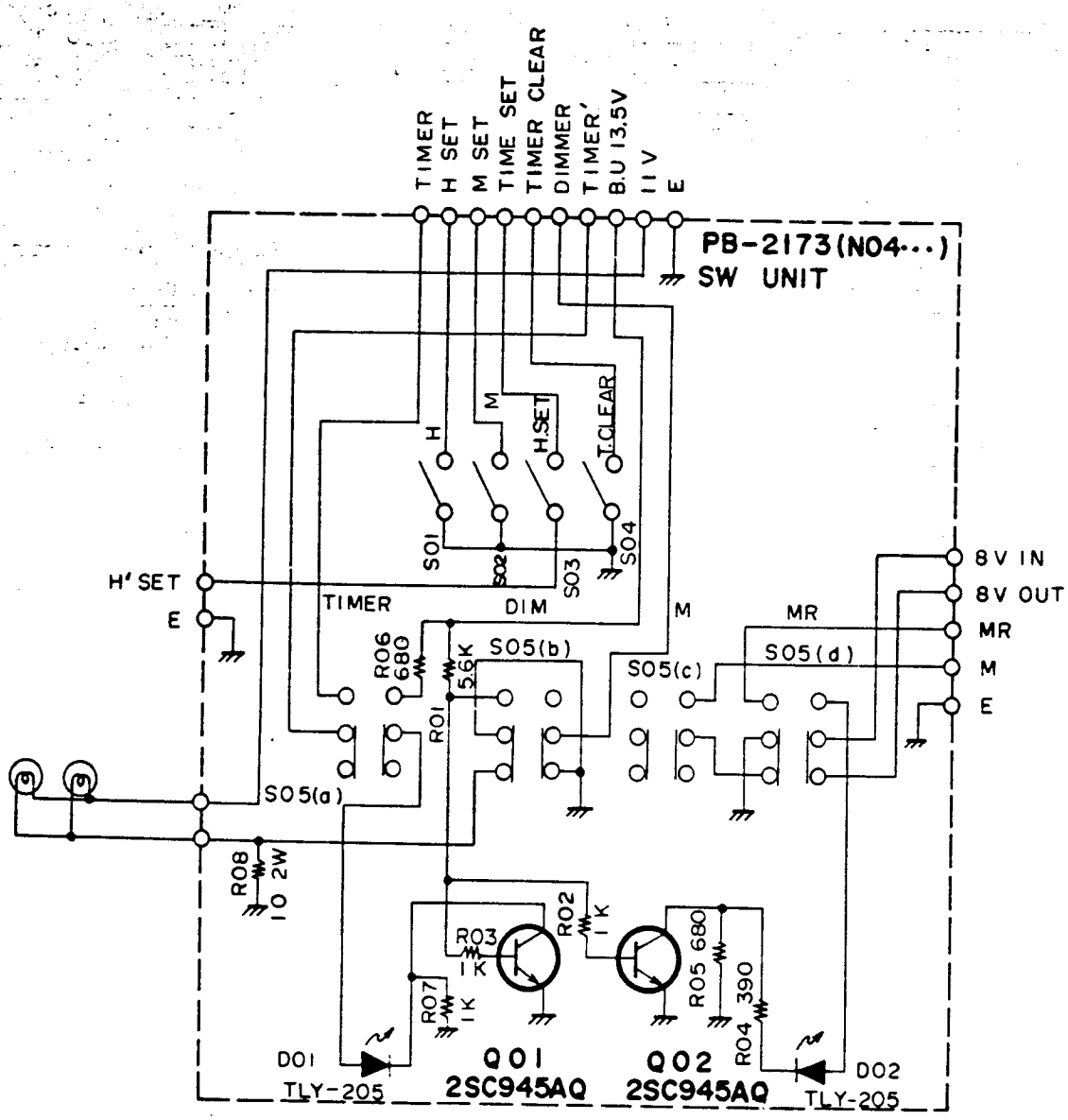
TIMER
H SET
M SET
TIME SET
TIMER CLEAR
DIMMER
TIMER'
B.U 13.5V
11 V
E
PB-2173(N04···)
SW UNIT
H
M
H.SET
T.CLEAR
S01
S02
S03
S04
H' SET
E
TIMER
DIM
M
MR
8V IN
8V OUT
MR
M
E
R06 680
5.6K
R01
S05(a)
S05(b)
S05(c)
S05(d)
R08 10 2W
R03 1K
R02 1K
R07 1K
R05 680
R04 390
D01
TLY-205
Q01
2SC945AQ
Q02
2SC945AQ
D02
TLY-205

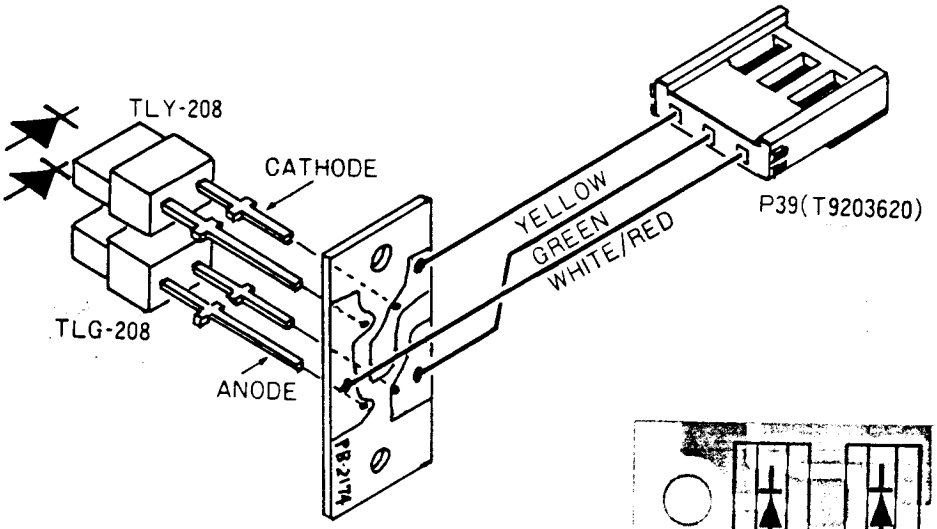
TLY-208
CATHODE
TLG-208
ANODE
YELLOW
GREEN
WHITE/RED
P39(T9203620)
PB-2174

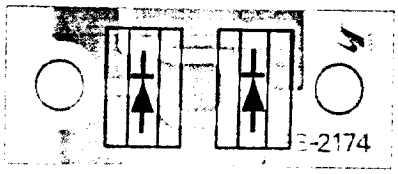
-2174

PARTS LAYOUT MEMORY UNIT(PB-2175)

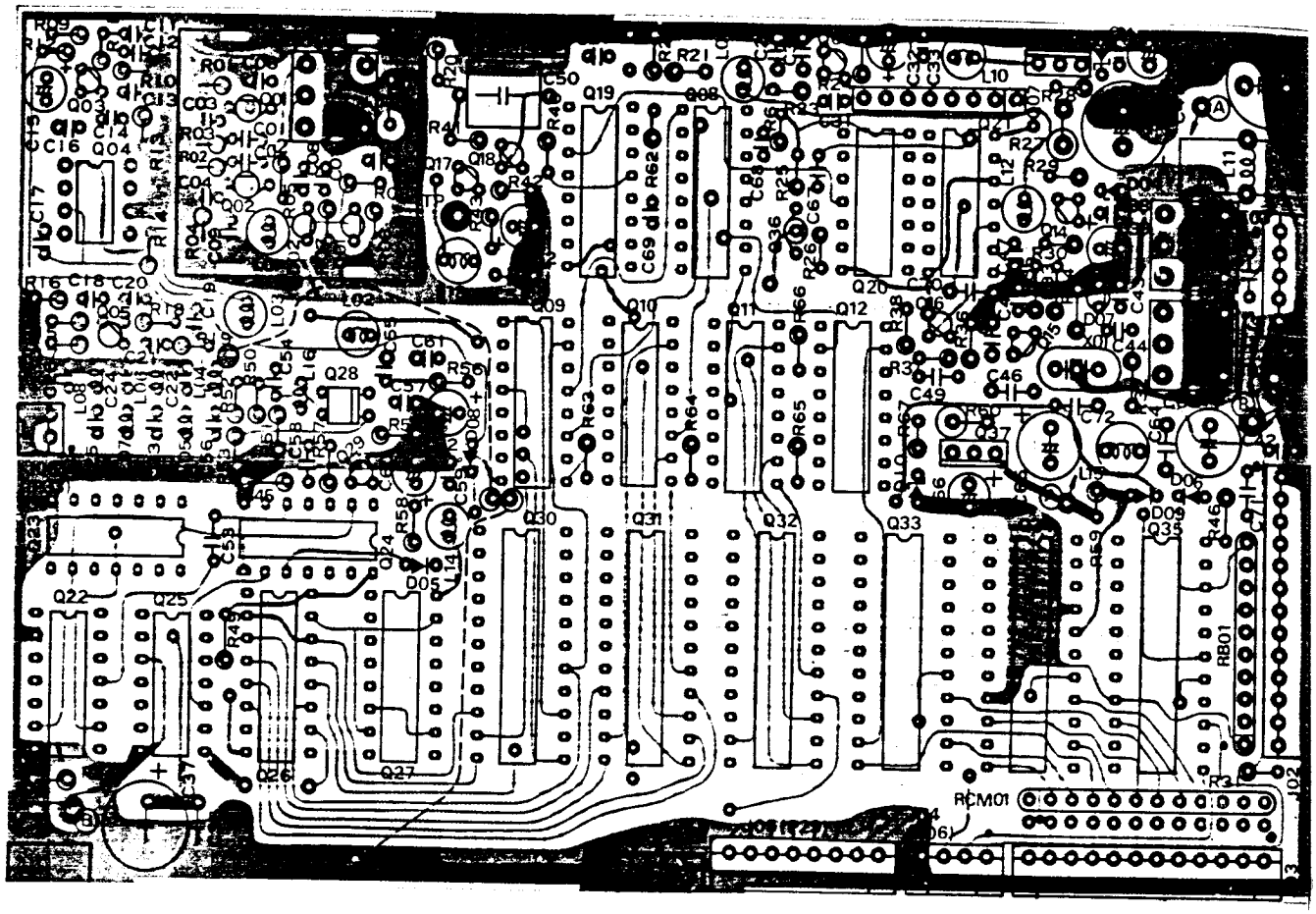

Viewed from component side

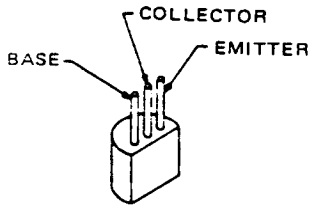

2SC900E
2SC1317R
2SC1674L

2SC945A
2SA733A

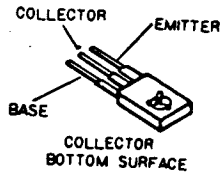

2SD822Q

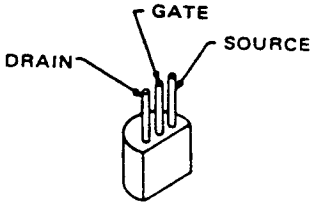

2SK107-3

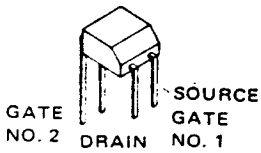

3SK73

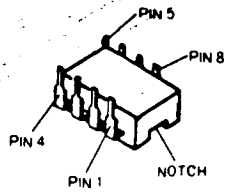

μPB553C

PARTS LAYOUT MEMORY UNIT(PB-2175)

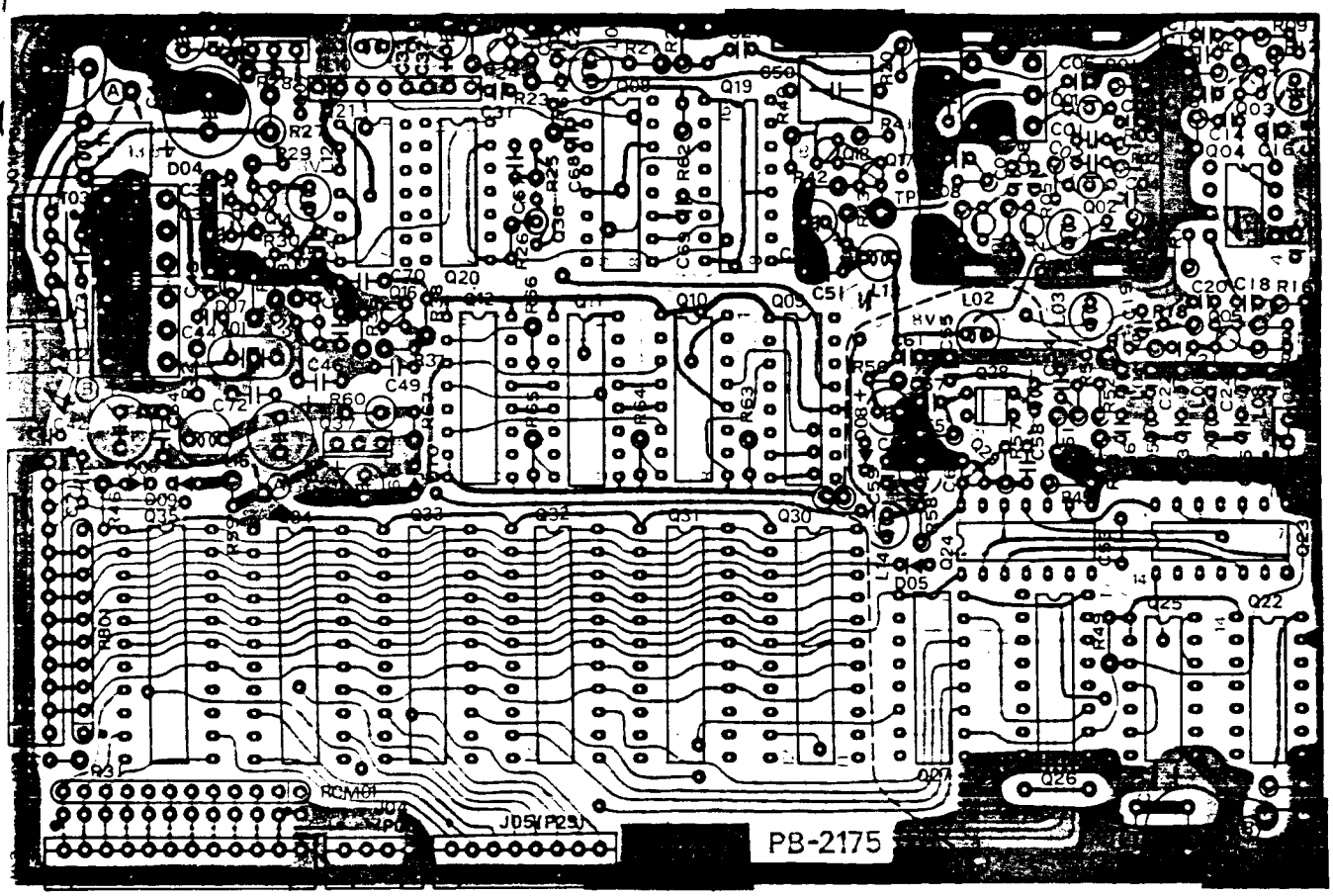

Viewed from foil side

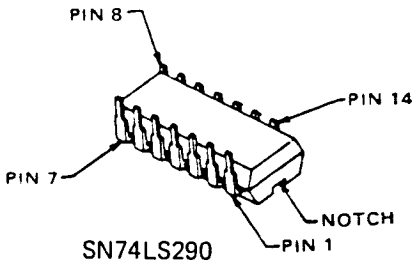

SN74LS290
SN74LS293
MC14024BCP
MC14069UBCP
MSM4023RS

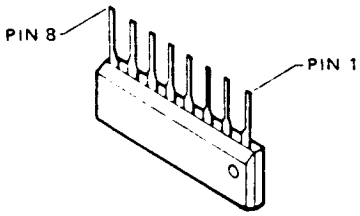

HD10551

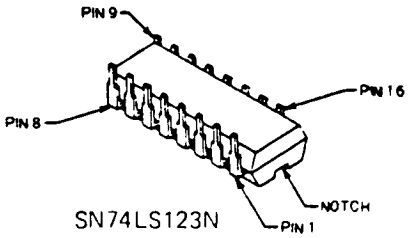

SN74LS123N
SN74LS192N
MC14046BCP
MC14518BCP

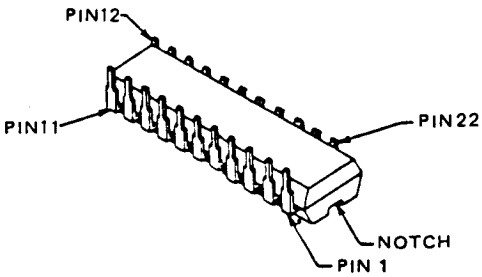

μPD5101

MEMORY UNIT CHECK POINT

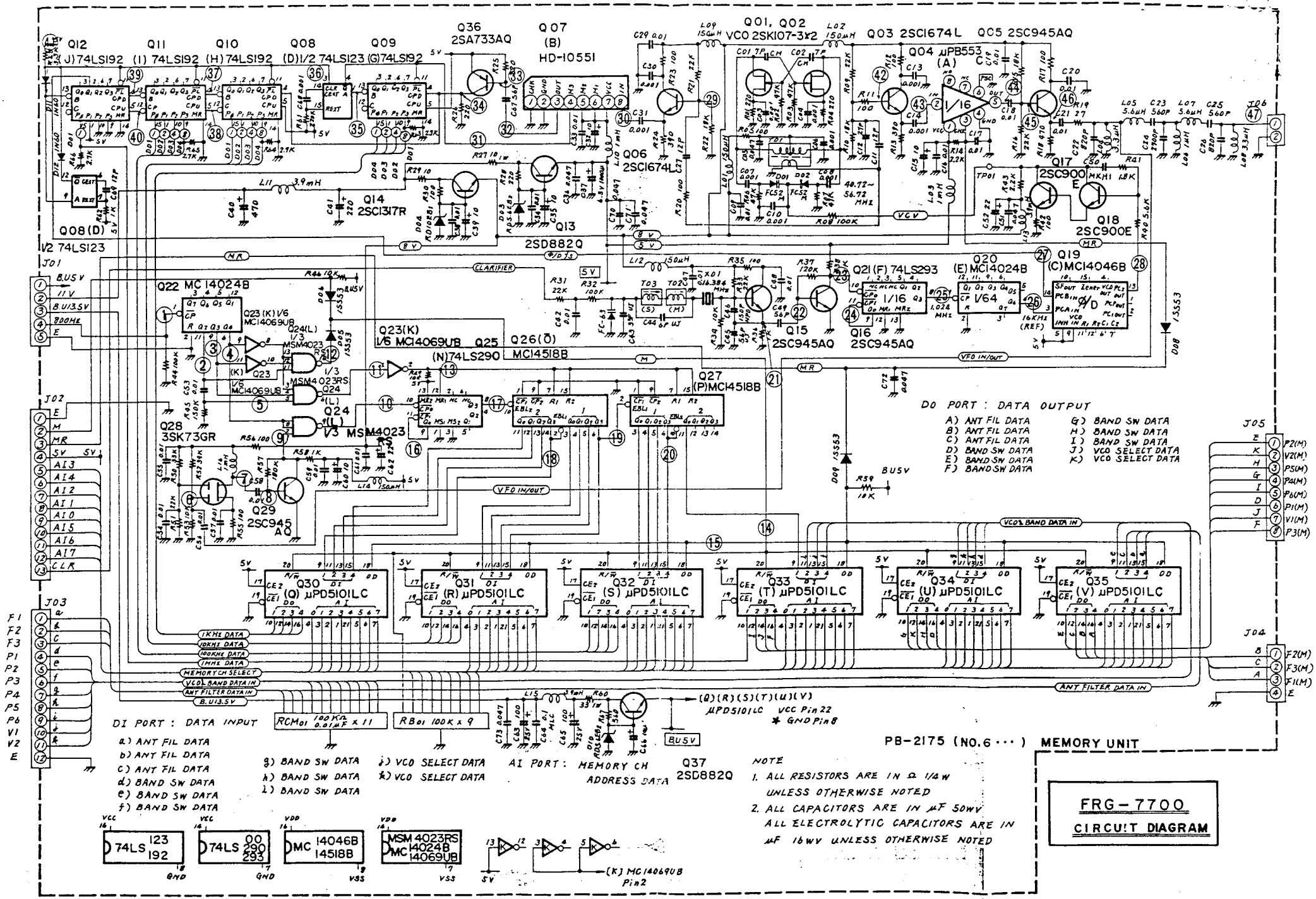

WAVE FORM CHART

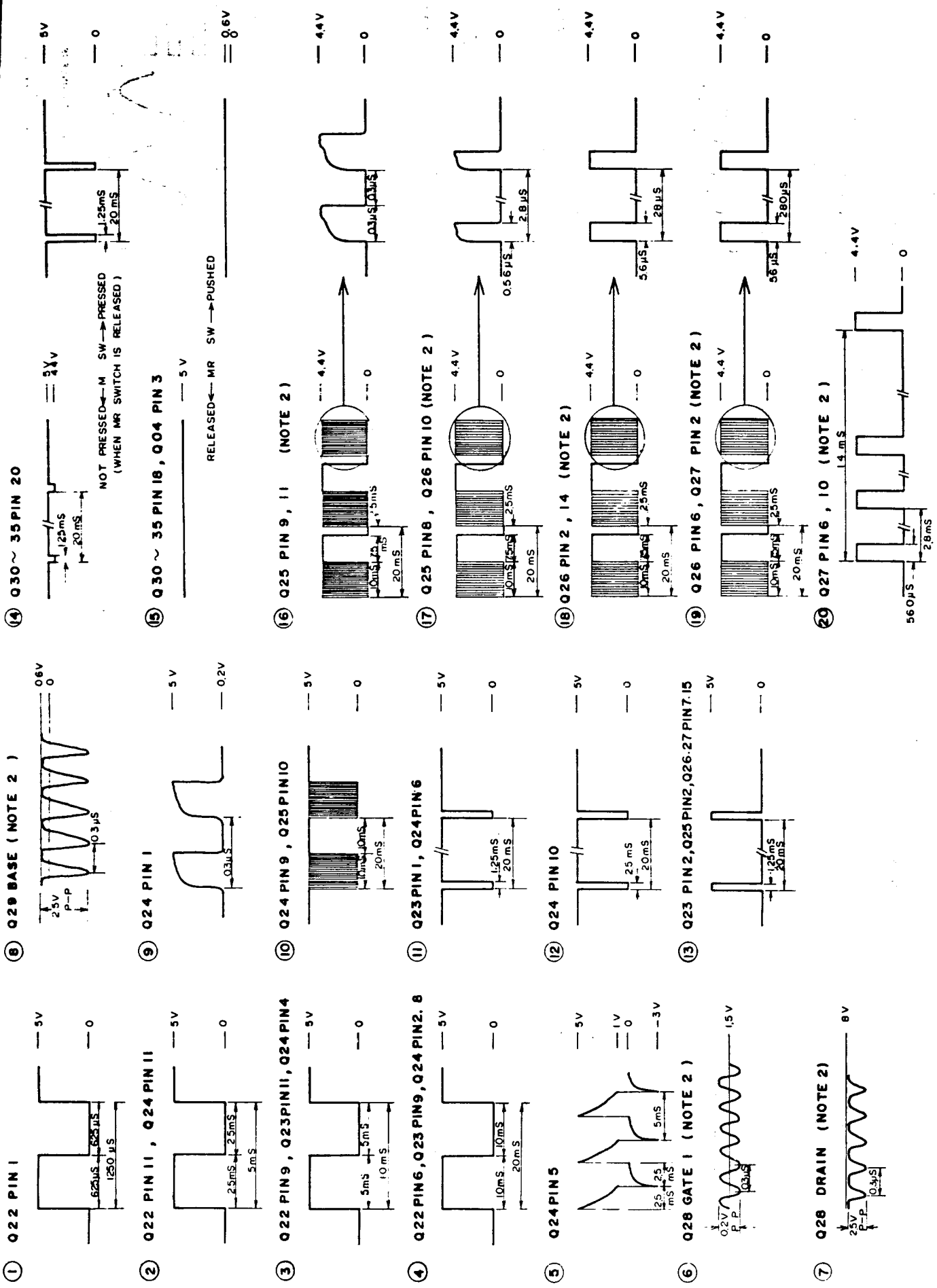

(21) Q15 EMITTER

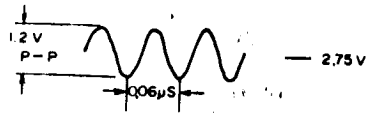

(22) Q16 BASE

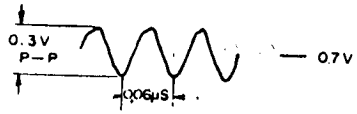

(23) Q21 PIN 10

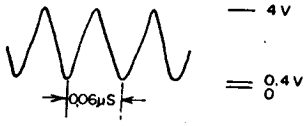

(24) Q21 PIN 9 . 11

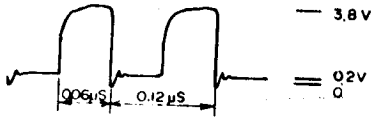

(25) Q20 PIN 1 , Q21 PIN 8

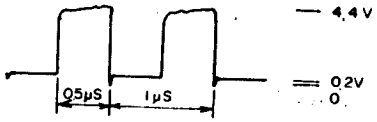

(26) Q19 PIN 3 , Q20 PIN 4

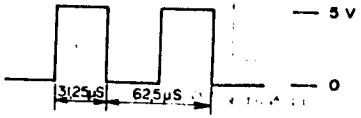

(27) Q12 PIN 2 , Q19 PIN 14

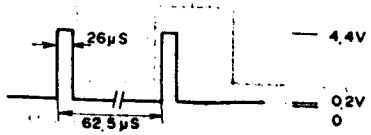

(28) Q19 PIN 13

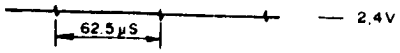

(29) Q06 BASE

(30) Q06 EMITTER , Q07 PIN 8

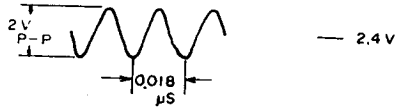

(31) Q07 PIN 4 , Q08 PIN 4 , Q09 PIN 11

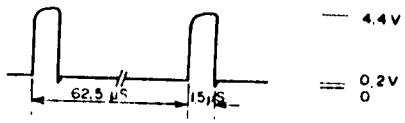

(32) Q07 PIN 3

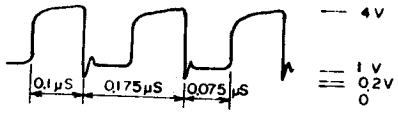

(33) Q36 BASE

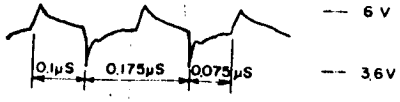

(34) Q36 COLLECTOR , Q09 PIN 4 , Q10 PIN 4

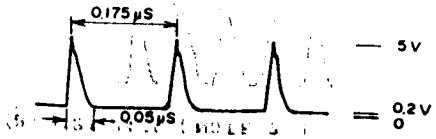

(35) Q08 PIN 1 , Q09 PIN 13

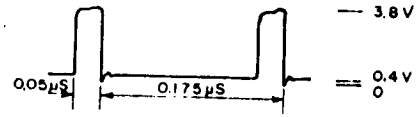

(36) Q08 PIN 3. 12 , Q10~12 PIN 11

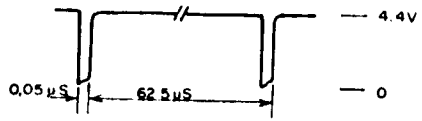

(37) Q10 PIN 13 , Q11 PIN 4

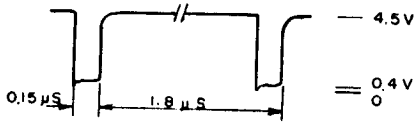

(38) Q10 PIN 12 , Q11 PIN 5

(39) Q11 PIN 13 , Q12 PIN 4

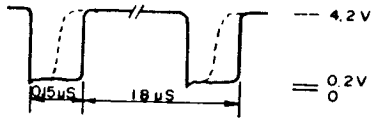

(40) Q11 PIN 12 , Q12 PIN 5

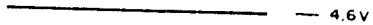

(41) Q12 PIN 13 , Q08 PIN 9

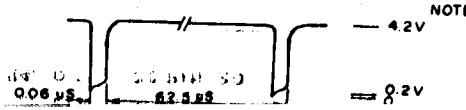

(42) Q03 BASE

(43) Q04 PIN 2

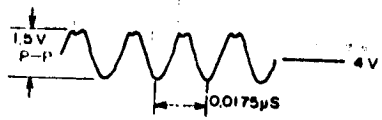

(44) Q04 PIN 5

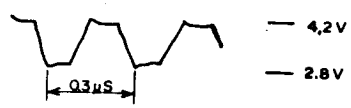

(45) Q05 BASE

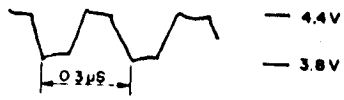

(46) Q05 EMITTER

(47) J06 PIN 1

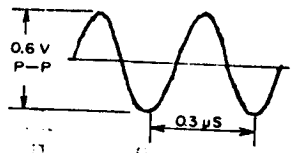

NOTE
1. WHEN MR SWITCH IS PUSHED UNLESS OTHRWISE NOTED.
2. WHEN MR SWITCH IS RELEASED.
3. DISPLAY FREQ. IS .044 MHz AT VFO FREQ. IS 3500 KHz.

TIMING CHART

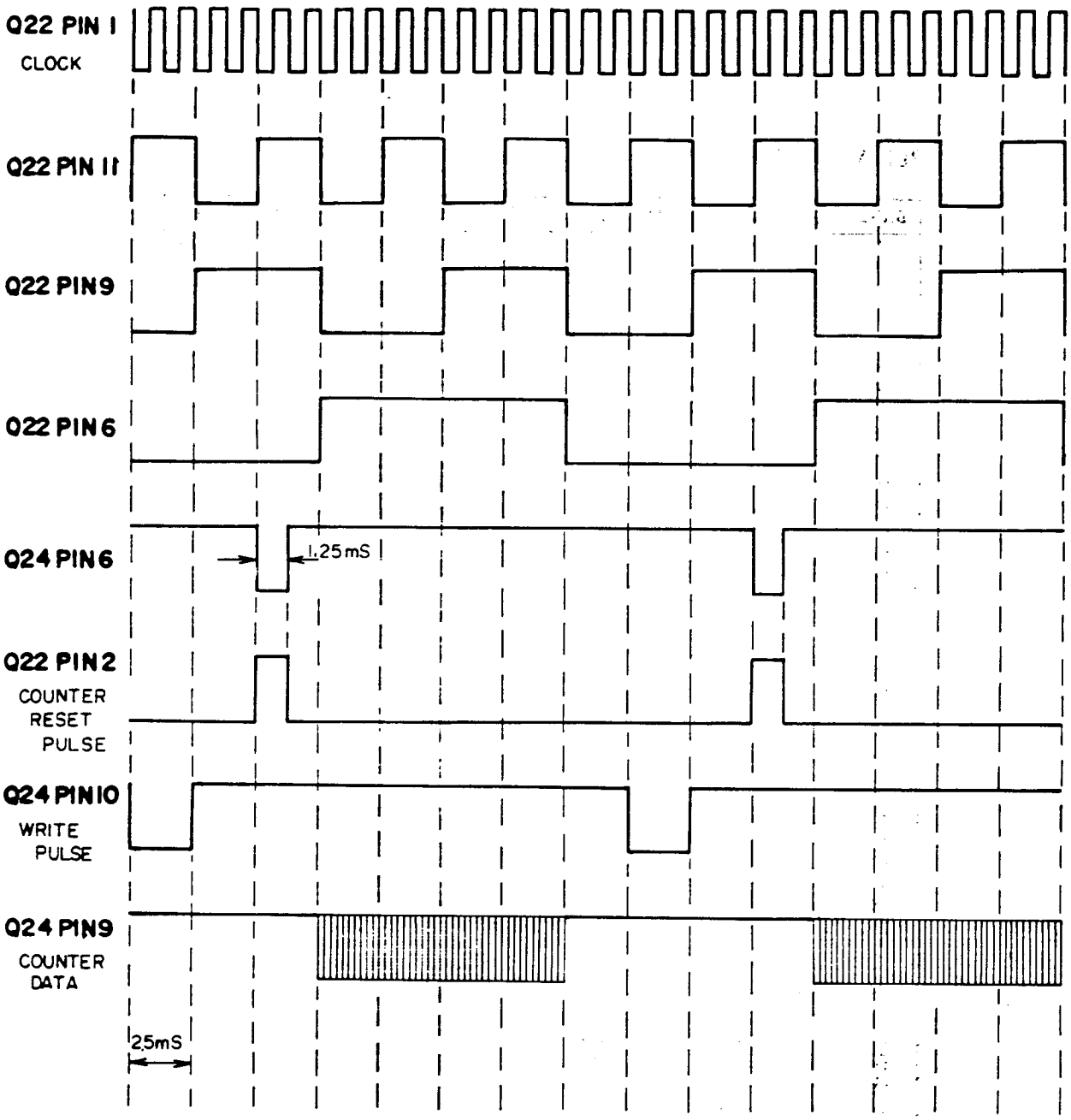

FRG-7700
MEMORY UNIT

PLL VCO SELECTION

BAND	Q2001	Q2002	Q2004	Q2005	Q2006	Q2007	Q2008	Q2009	Q2010	Q2011
0	–	–	–	–	–	ON	–	–	–	ON
1	–	–	–	–	–	ON	–	–	–	ON
2	–	–	–	–	–	ON	–	–	–	ON
3	–	–	–	–	–	ON	–	–	–	ON
4	–	–	–	–	–	ON	–	–	–	ON
5	–	–	–	–	–	ON	–	–	–	ON
6	ON	–	–	–	ON	–	–	–	ON	–
7	ON	–	–	–	ON	–	–	–	ON	–
8	ON	–	–	–	ON	–	–	–	ON	–
9	ON	–	–	–	ON	–	–	–	ON	–
10	ON	–	–	–	ON	–	–	–	ON	–
11	ON	–	–	–	ON	–	–	–	ON	–
12	ON	–	–	–	ON	–	–	–	ON	–
13	–	ON	–	ON	–	–	–	ON	–	–
14	–	ON	–	ON	–	–	–	ON	–	–
15	–	ON	–	ON	–	–	–	ON	–	–
16	–	ON	–	ON	–	–	–	ON	–	–
17	–	ON	–	ON	–	–	–	ON	–	–
18	–	ON	–	ON	–	–	–	ON	–	–
19	–	ON	–	ON	–	–	–	ON	–	–
20	–	ON	–	ON	–	–	–	ON	–	–
21	ON	ON	ON	–	–	–	ON	–	–	–
22	ON	ON	ON	–	–	–	ON	–	–	–
23	ON	ON	ON	–	–	–	ON	–	–	–
24	ON	ON	ON	–	–	–	ON	–	–	–
25	ON	ON	ON	–	–	–	ON	–	–	–
26	ON	ON	ON	–	–	–	ON	–	–	–
27	ON	ON	ON	–	–	–	ON	–	–	–
28	ON	ON	ON	–	–	–	ON	–	–	–
29	ON	ON	ON	–	–	–	ON	–	–	–
1	–	–	–	–	–	ON	–	–	–	ON
3	–	–	–	–	–	ON	–	–	–	ON
7	ON	–	–	–	ON	–	–	–	ON	–
10	ON	–	–	–	ON	–	–	–	ON	–
14	–	ON	–	ON	–	–	–	ON	–	–
18	–	ON	–	ON	–	–	–	ON	–	–
21	ON	ON	ON	–	–	–	ON	–	–	–
24	ON	ON	ON	–	–	–	ON	–	–	–
28	ON	ON	ON	–	–	–	ON	–	–	–
29	ON	ON	ON	–	–	–	ON	–	–	–

ON – ON
– – OFF

PLL DIVIDING RATIO

BAND	Q2042 DIVIDING RATIO	Q2042 (MB-8718) PIN No.					
		13	14	15	16	17	18
0	1/4	0	0	1	0	0	0
1	1/5	1	0	1	0	0	0
2	1/6	0	1	1	0	0	0
3	1/7	1	1	1	0	0	0
4	1/8	0	0	0	1	0	0
5	1/9	1	0	0	1	0	0
6	1/10	0	0	0	0	1	0
7	1/11	1	0	0	0	1	0
8	1/12	0	1	0	0	1	0
9	1/13	1	1	0	0	1	0
10	1/14	0	0	1	0	1	0
11	1/15	1	0	1	0	1	0
12	1/16	0	1	1	0	1	0
13	1/17	1	1	1	0	1	0
14	1/18	0	0	0	1	1	0
15	1/19	1	0	0	1	1	0
16	1/20	0	0	0	0	0	1
17	1/21	1	0	0	0	0	1
18	1/22	0	1	0	0	0	1
19	1/23	1	1	0	0	0	1
20	1/24	0	0	1	0	0	1
21	1/25	1	0	1	0	0	1
22	1/26	0	1	1	0	0	1
23	1/27	1	1	1	0	0	1
24	1/28	0	0	0	1	0	1
25	1/29	1	0	0	1	0	1
26	1/30	0	0	0	0	1	1
27	1/31	1	0	0	0	1	1
28	1/32	0	1	0	0	1	1
29	1/33	1	1	0	0	1	1
1	1/5	1	0	1	0	0	0
3	1/7	1	1	1	0	0	0
7	1/11	1	0	0	0	1	0
10	1/14	0	0	1	0	1	0
14	1/18	0	0	0	1	1	0
18	1/22	0	1	0	0	0	1
21	1/26	1	0	1	0	0	1
24	1/28	0	0	0	1	0	1
28	1/32	0	1	0	0	1	1
29	1/33	1	1	0	0	1	1

1 – HI LEVEL
0 – LOW LEVEL

MAIN UNIT BPF SELECTION

BAND	J1005 PIN No.			Q1007	Q1008	Q1009	Q1010	Q1011	Q1012
	2	3	4						
0	0	0	0	–	–	–	–	–	ON
1	1	0	0	–	–	–	–	ON	–
2	0	1	0	–	–	–	ON	–	–
3	0	1	0	–	–	–	ON	–	–
4	1	1	0	–	–	ON	–	–	–
5	1	1	0	–	–	ON	–	–	–
6	1	1	0	–	–	ON	–	–	–
7	1	1	0	–	–	ON	–	–	–
8	0	0	1	–	ON	–	–	–	–
9	0	0	1	–	ON	–	–	–	–
10	0	0	1	–	ON	–	–	–	–
11	0	0	1	–	ON	–	–	–	–
12	0	0	1	–	ON	–	–	–	–
13	0	0	1	–	ON	–	–	–	–
14	0	0	1	–	ON	–	–	–	–
15	0	0	1	–	ON	–	–	–	–
16	0	1	1	ON	–	–	–	–	–
17	0	1	1	ON	–	–	–	–	–
18	0	1	1	ON	–	–	–	–	–
19	0	1	1	ON	–	–	–	–	–
20	0	1	1	ON	–	–	–	–	–
21	0	1	1	ON	–	–	–	–	–
22	0	1	1	ON	–	–	–	–	–
23	0	1	1	ON	–	–	–	–	–
24	0	1	1	ON	–	–	–	–	–
25	0	1	1	ON	–	–	–	–	–
26	0	1	1	ON	–	–	–	–	–
27	0	1	1	ON	–	–	–	–	–
28	0	1	1	ON	–	–	–	–	–
29	0	1	1	ON	–	–	–	–	–
1	1	0	0	–	–	–	–	ON	–
3	0	1	0	–	–	–	ON	–	–
7	1	1	0	–	–	ON	–	–	–
10	0	0	1	–	ON	–	–	–	–
14	0	0	1	–	ON	–	–	–	–
18	0	1	1	ON	–	–	–	–	–
21	0	1	1	ON	–	–	–	–	–
24	0	1	1	ON	–	–	–	–	–
28	0	1	1	ON	–	–	–	–	–
29	0	1	1	ON	–	–	–	–	–

1 – HI LEVEL ON – ON
0 – LOW LEVEL – – OFF

BAND SWITCH CONTACT POSITION

BAND	BAND SWITCH (S2001)										
	S1 PIN No. (common No. 4)						S2 PIN No. (common No. 8)				
	8	7	6	5	2	3	1	2	3	6	7
0	–	–	ON	–	–	–	–	–	–	–	–
1	ON	–	ON	–	–	–	ON	–	–	–	–
2	–	ON	ON	–	–	–	–	ON	–	–	–
3	ON	ON	ON	–	–	–	–	ON	–	–	–
4	–	–	–	ON	–	–	ON	ON	–	–	–
5	ON	–	–	ON	–	–	ON	ON	–	–	–
6	–	–	–	–	ON	–	ON	ON	–	ON	–
7	ON	–	–	–	ON	–	ON	ON	–	ON	–
8	–	ON	–	–	ON	–	–	–	ON	ON	–
9	ON	ON	–	–	ON	–	–	–	ON	ON	–
10	–	–	ON	–	ON	–	–	–	ON	ON	–
11	ON	–	ON	–	ON	–	–	–	ON	ON	–
12	–	ON	ON	–	ON	–	–	–	ON	ON	–
13	ON	ON	ON	–	ON	–	–	–	ON	–	ON
14	–	–	–	ON	ON	–	–	–	ON	–	ON
15	ON	–	–	ON	ON	–	–	–	ON	–	ON
16	–	–	–	–	–	ON	–	ON	ON	–	ON
17	ON	–	–	–	–	ON	–	ON	ON	–	ON
18	–	ON	–	–	–	ON	–	ON	ON	–	ON
19	ON	ON	–	–	–	ON	–	ON	ON	–	ON
20	–	–	ON	–	–	ON	–	ON	ON	–	ON
21	ON	–	ON	–	–	ON	–	ON	ON	ON	ON
22	–	ON	ON	–	–	ON	–	ON	ON	ON	ON
23	ON	ON	ON	–	–	ON	–	ON	ON	ON	ON
24	–	–	–	ON	–	ON	–	ON	ON	ON	ON
25	ON	–	–	ON	–	ON	–	ON	ON	ON	ON
26	–	–	–	–	ON	ON	–	ON	ON	ON	ON
27	ON	–	–	–	ON	ON	–	ON	ON	ON	ON
28	–	ON	–	–	ON	ON	–	ON	ON	ON	ON
29	ON	ON	–	–	ON	ON	–	ON	ON	ON	ON
1	ON	–	ON	–	–	–	ON	–	–	–	–
3	ON	ON	ON	–	–	–	–	ON	–	–	–
7	ON	–	–	–	ON	–	ON	ON	–	ON	–
10	–	–	ON	–	ON	–	–	–	ON	ON	–
14	–	–	–	ON	ON	–	–	–	ON	–	ON
18	–	ON	–	–	–	ON	–	ON	ON	–	ON
21	ON	–	ON	–	–	ON	–	ON	ON	ON	ON
24	–	–	–	ON	–	ON	–	ON	ON	ON	ON
28	–	ON	–	–	ON	ON	–	ON	ON	ON	ON
29	ON	ON	–	–	ON	ON	–	ON	ON	ON	ON

ON – ON
– – OFF

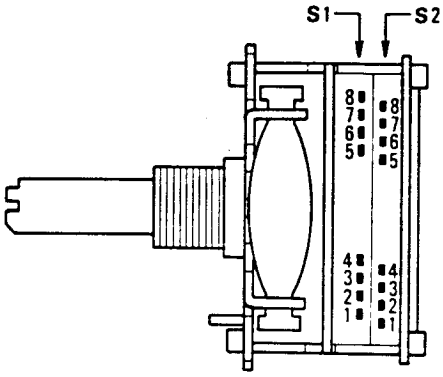

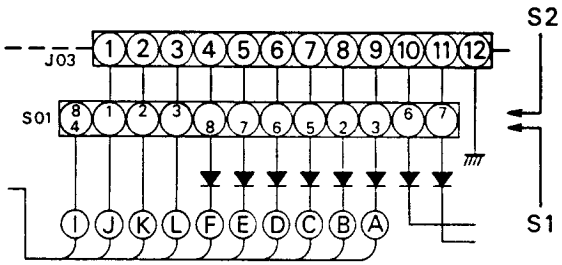

SOLDERING AND DESOLDERING TECHNIQUE ON PRINTED CIRCUIT BOARDS

The FRG-7700 circuit boards are tough, but mishandling during soldering can cause circuit traces to "lift." While this does not cause permanent damage to the board, much servicing trouble can result, because of the tendency for this lifted trace to break. A few simple precautions will keep your circuit boards in A-1 condition.

1. Use only a 12 to 30 watt chisel-tip soldering iron. Yes, some "repairmen" have been known to use small blowtorches on cards.

2. Use only a soldering iron equipped with a three-wire cord, with the tip grounded. Also acceptable is a soldering iron isolated through a transformer. An old soldering iron or gun may have 117 volts on the tip, and will certainly cause more damage than it repairs!

3. USE ONLY 60/40 ROSIN CORE SOLDER. Acid core solder should be thrown away if you find it in your radio shop!

4. Use a solder sucker and solder tape to ensure a professional repair job.

5. If you do lift a trace, don't worry! Read on to find out how to repair traces like a pro.

NOTES ON USE OF CMOS IC's:

As CMOS devices are extremely sensitive to damage from static electricity, special precautions must be observed.

In storage, use only sponge specially designed for CMOS components.

When installing a CMOS IC in a socket, or on a circuit board, be certain that the power is off. In addition, the technician should rest his hand on the chassis as the component is inserted, so as to place his hand at the same potential as the chassis (better to discharge small amounts of static electricity through your fingers than through a $5 IC !).

When soldering a CMOS IC onto a circuit board, use a low wattage iron, and be sure to ground the tip with a clip lead, if the tip is not grounded through a three-wire power cord.

INSERTION OF PARTS ON CIRCUIT BOARDS

All of the below are acceptable ways of inserting components into circuit board mounting holes.

(a) Bend leads slightly

(b) Straight-in mounting

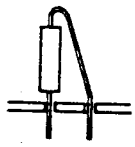

(c) Vertical mounting

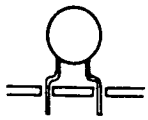

(d) Preformed disc ceramic capacitor

(e) Preformed resistor, diode, etc.

BASIC SOLDERING PRACTICE

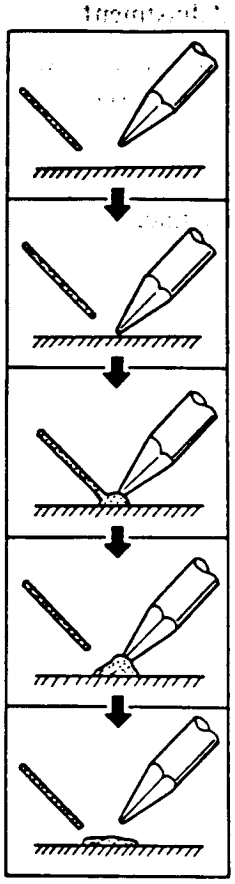

(1) Prepare soldering iron and solder.

(2) Apply soldering iron to surface to be soldered.

(3) Apply solder to heated surface.

(4) When enough solder is applied, remove solder. Continue to apply heat until solder flows cleanly.

(5) Remove iron from work. Do not apply more heat than necessary for good solder flow.

Soldering to terminal posts:

(Be certain to apply heat to both post and wire.)

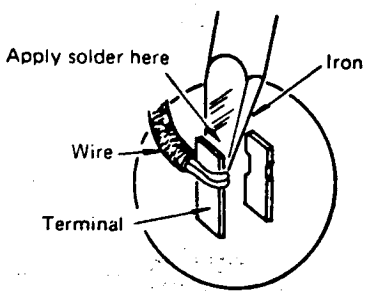

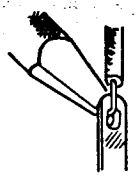

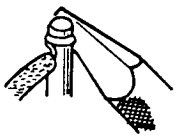

EXAMPLES OF POOR SOLDERING PRACTICE

Solder bridge (caused by use of too much solder)

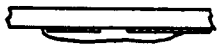

"Cold joint" (caused by insufficient heat to part of work, resulting in poor solder flow)

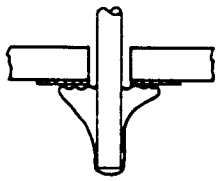

Lifted trace (caused by too much heat on circuit board foil)

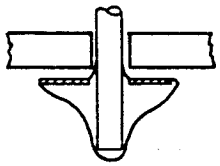

Unstable joint (caused by insufficient heat or solder)

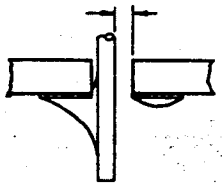

MAINTENANCE AND ALIGNMENT

GENERAL

The FRG-7700 has been carefully aligned and tested at the factory prior to shipment. With normal usage, it should not require other than the usual attention given to electronic equipment. Service or replacement of a major component may entail substantial realignment; under no circumstances, however, should realignment be attempted unless the operation of the receiver is fully understood, and the malfunction has been definitely traced to misalignment rather than component failure. Service work should be performed only by experienced personnel using the proper test equipment.

MAIN UNIT

(1) Counter Clock Frequency Adjustment

Connect a frequency counter to TP_{1007}. Adjust TC_{1003} for a reading of 3.2768 MHz on the counter.

(2) SSB Carrier Frequency Adjustment

a. Connect a frequency counter to TP_{1005}, and set the MODE switch to the USB position. Adjust TC_{1002} for a reading of 456.5 kHz on the counter.

b. Set the MODE switch to the LSB/CW position. Adjust TC_{1001} for a reading of 453.5 kHz on the counter.

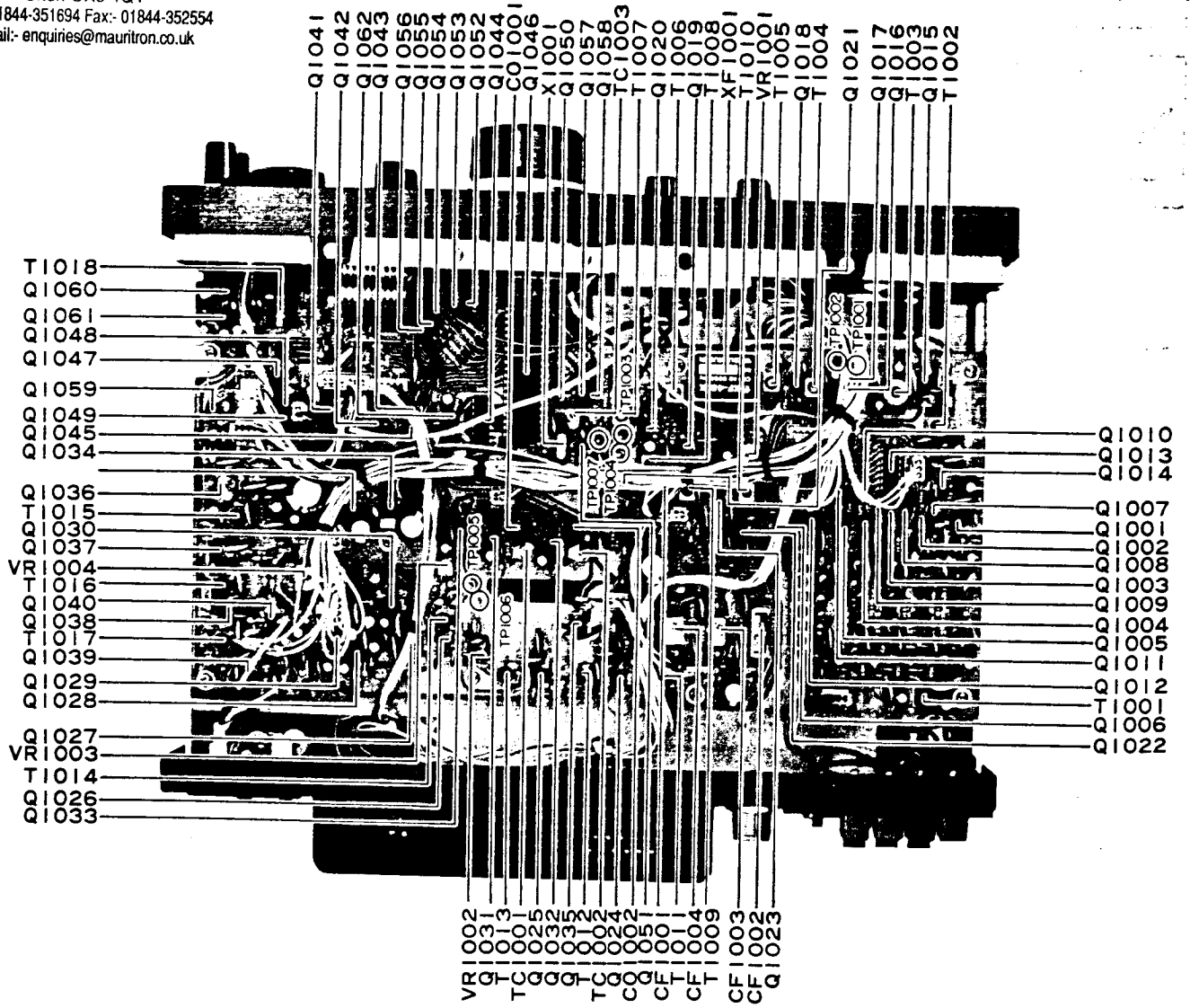

TOP VIEW

(3) First and Second IF Adjustment

Set the MODE switch to LSB/CW, the ATT switch to DX, and rotate the ATT control fully counter-clockwise. Connect a signal generator to the antenna jack, J_1, and set its frequency to 8.01 MHz. Tune the receiver to 8.01 MHz, set the signal generator output to a level sufficient to obtain deflection of the S-meter, and adjust T_{1004} – T_{1008} and T_{1011} – T_{1014} for maximum S-meter reading.

(4) S-Meter Sensitivity and Full Scale Adjustment

a. Preset the controls, switches, and dial frequency as in step 3. Set the signal generator output level to 8 dB (ref: 0 dB = 1μV). Adjust VR_{1002} so that the S-meter just begins to move off the left-hand peg on its scale.

b. Set the signal generator output level to 90 dB. Adjust VR_{1004} for a full scale reading on the S-meter.

(5) NB Adjustment

a. Connect a VTVM to the source of Q_{1037}, and a signal generator to antenna jack J_1. Set the signal generator output level to 20 dB, output frequency to 8.01 MHz, and adjust T_{1015} – T_{1017} for a minimum reading on the VTVM.

b. Connect a noise generator to antenna jack J_1, and press the NB switch. Adjust VR_{1001} for a minimum noise level from the speaker.

(6) Trap Adjustment

Connect a signal generator to antenna jack J_1, and set its frequency to the first IF frequency, 48.055 MHz. Set the signal generator output level to a level sufficient to obtain deflection on the S-meter, then T_{1002} for a minimum reading on the S-meter.

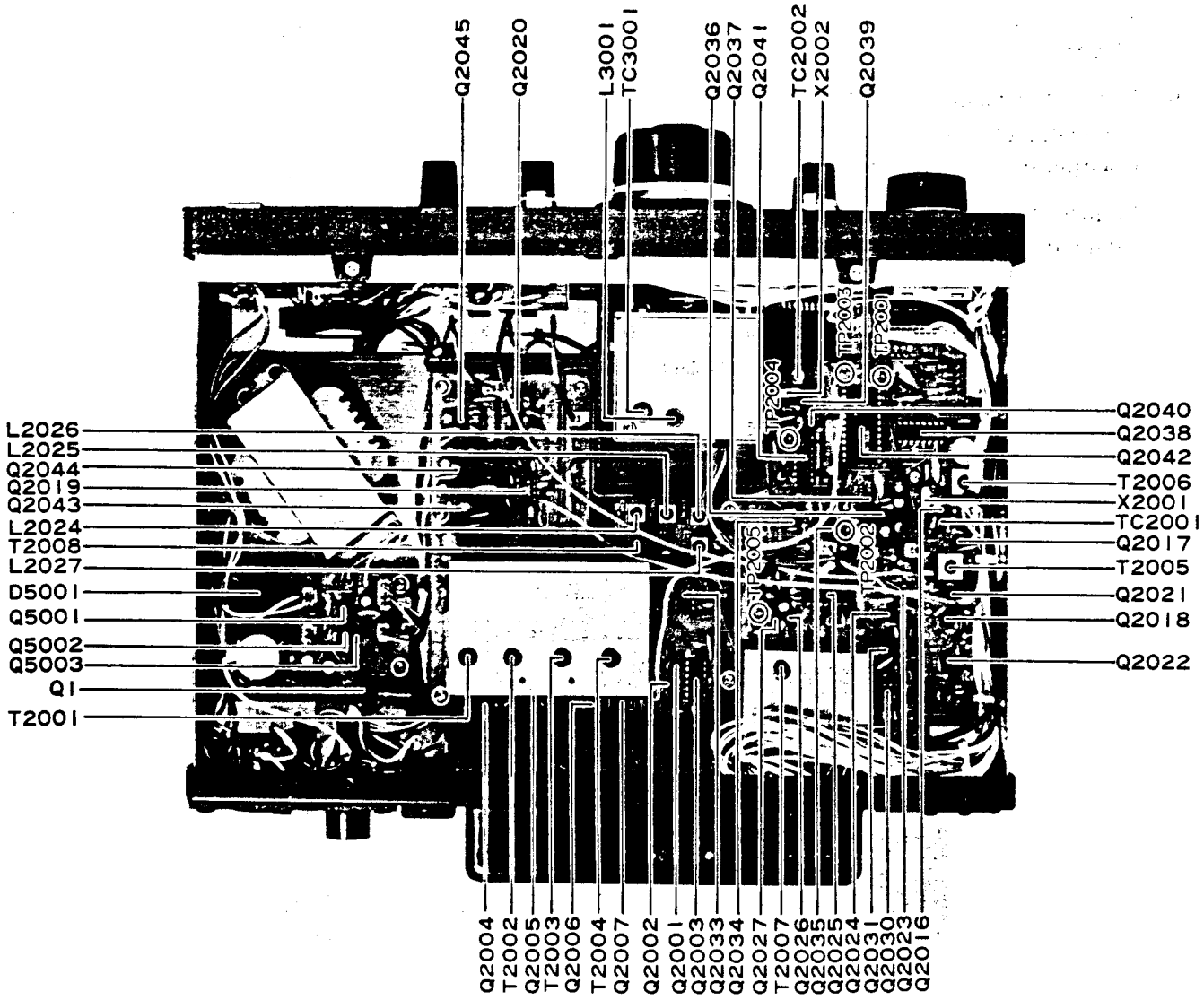

BOTTOM VIEW

PLL UNIT

(1) PLL Reference Oscillator Adjustment

Set the MR switch to off, and connect a frequency counter to pin 9 of Q_{2041}. Adjust TC_{2002} for a reading of exactly 3.2 MHz on the counter.

(2) PLL Local Alignment

a. Connect the RF probe of a VTVM to pin 1 of J_{2005}. Adjust T_{2005} and T_{2006} for a maximum meter reading on the VTVM (typical value: 100-200 mV RMS).

b. Connect a frequency counter to pin 1 of J_{2005}. Adjust TC_{2001} for a reading of exactly 47.6 MHz on the counter.

(3) VCV Line Adjustment

a. Connect the DC probe of a VTVM to TP_{2005} (PLL Unit), and rotate the main dial to the "1000" position on the analog dial. Adjust T_{2007} to secure a reading of 7 volts on the VTVM.

b. Rotate the main dial to the "0" position on the analog dial. Make certain that the voltage is within the range of 1.5 – 2.0 volts.

c. Connect the VTVM DC probe to TP_{2003}, and rotate the main dial to the "1000" position. Set the BAND switch to the 5 MHz band, an adjust T_{2004} to obtain a reading of 7.4 vol on the VTVM.

d. Change the BAND switch to the 12, 20, an 29 MHz band positions, and adjust VCO coil T_{2003}, T_{2002}, T_{2001}, respectively, to obtai readings of 7.4 volts on the VTVM.

e. Set the BAND switch to the 21, 13 and MHz band positions, and rotate the main dia to the "0" position on the analog dial. Mak certain that the voltages at TP_{2003} are withir the range of 1.5 – 2.0 volts.

MEMORY UNIT

(1) M FINE Adjustment

Set the M FINE control to the 12 o'clock position, and connect a frequency counter to pin 9 o Q_{6021}. Adjust T_{6003} for a reading of 8.192 MHz on the counter.

(2) VCV Line Adjustment

Initially set the MR switch in the OFF position, and connect a VTVM to TP_{6001}. Rotate the main dial to the "0" position on the analog skirt, and push the M button. Then press the MR button, and adjust T_{6001} to obtain a reading of 6.6 volts on the VTVM.

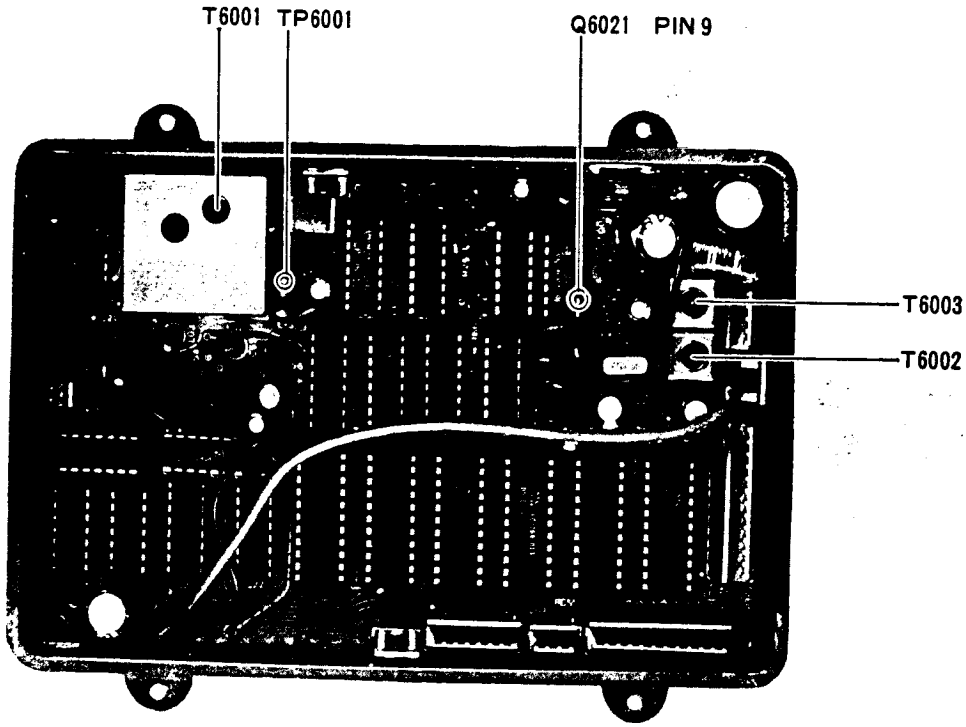

MEMORY UNIT

TROUBLESHOOTING

(1) No operation (Fuse blows)
(2) No operation (Fuse OK)
(3) No reception (all mode)
(4) No reception (USB, LSB, CW mode)
(5) No reception (AM mode)
(6) No reception (FM mode)
(7) No audio output
(8) Tone control not operative
(9) Squelch circuit not operative
(10) Noise Blanker not operative
(11) AGC switch not operative (SSB, CW, FM mode)
(12) AGC switch not operative (AM mode)
(13) ATT circuit not operative

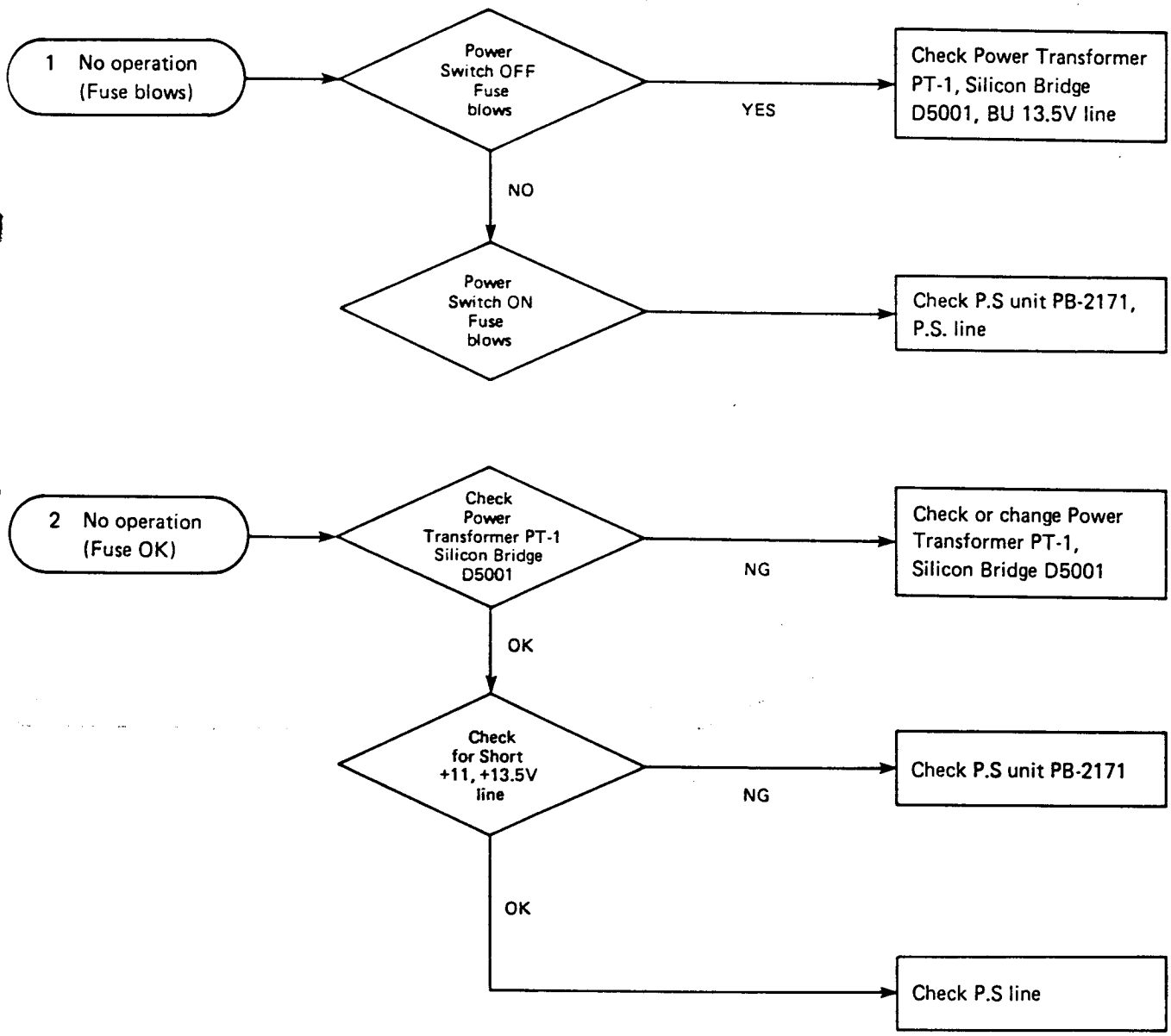

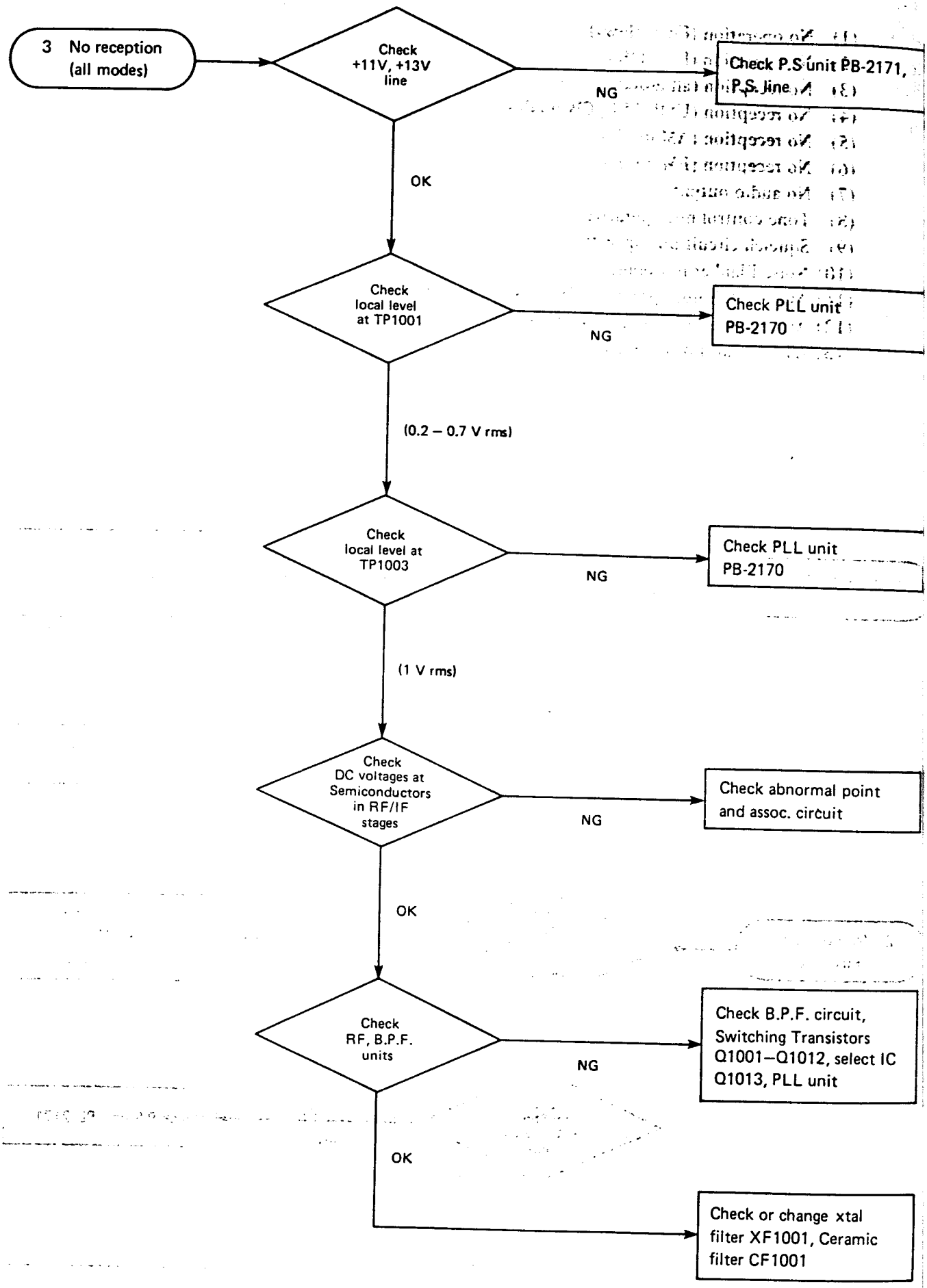
3 No reception (all modes)
Check +11V, +13V line
NG
Check P.S unit PB-2171, P.S. line
OK
Check local level at TP1001
NG
Check PLL unit PB-2170
(0.2 – 0.7 V rms)
Check local level at TP1003
NG
Check PLL unit PB-2170
(1 V rms)
Check DC voltages at Semiconductors in RF/IF stages
NG
Check abnormal point and assoc. circuit
OK
Check RF, B.P.F. units
NG
Check B.P.F. circuit, Switching Transistors Q1001–Q1012, select IC Q1013, PLL unit
OK
Check or change xtal filter XF1001, Ceramic filter CF1001

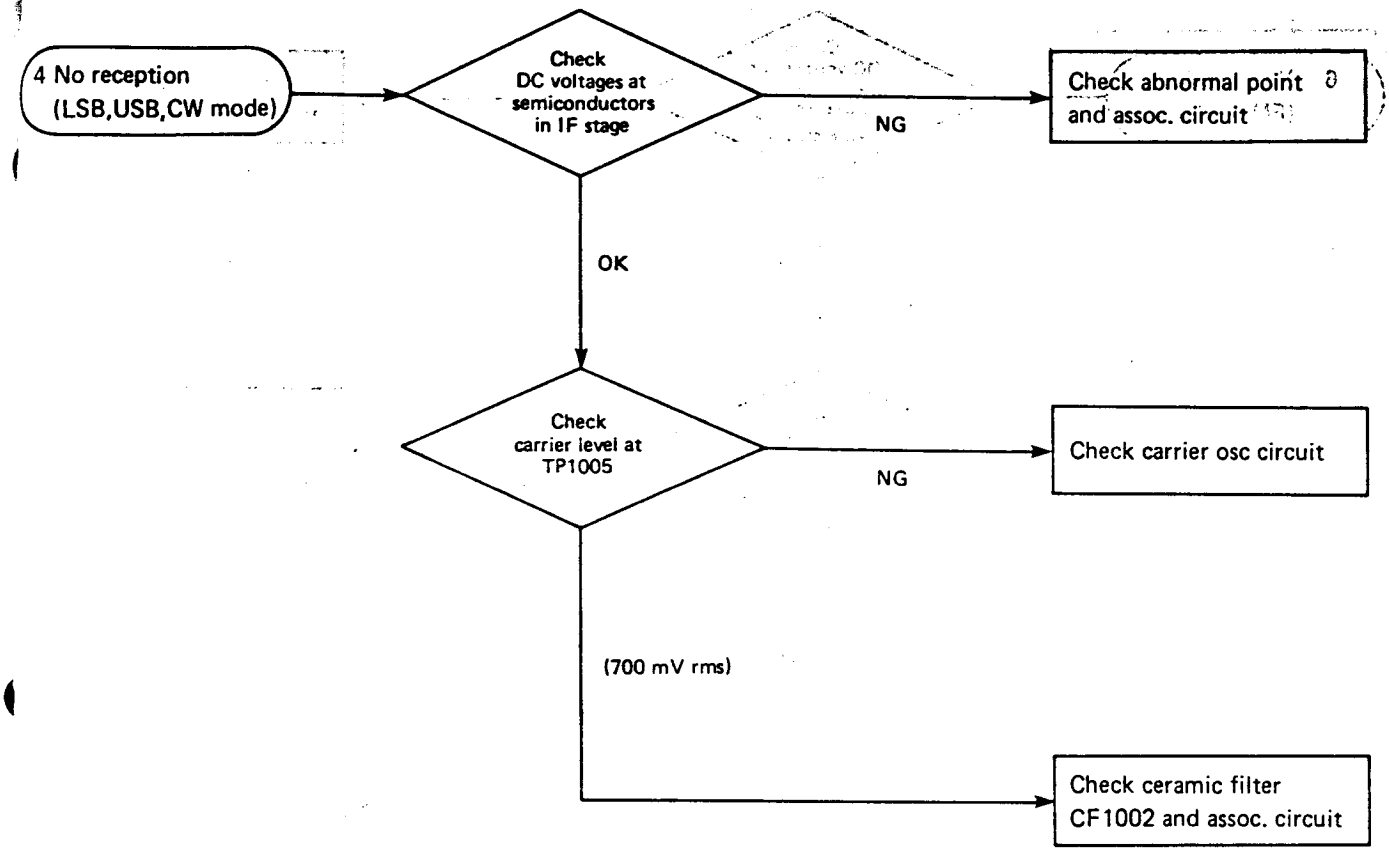
4 No reception
(LSB,USB,CW mode)
Check
DC voltages at
semiconductors
in IF stage
NG
Check abnormal point
and assoc. circuit
OK
Check
carrier level at
TP1005
NG
Check carrier osc circuit
(700 mV rms)
Check ceramic filter
CF1002 and assoc. circuit

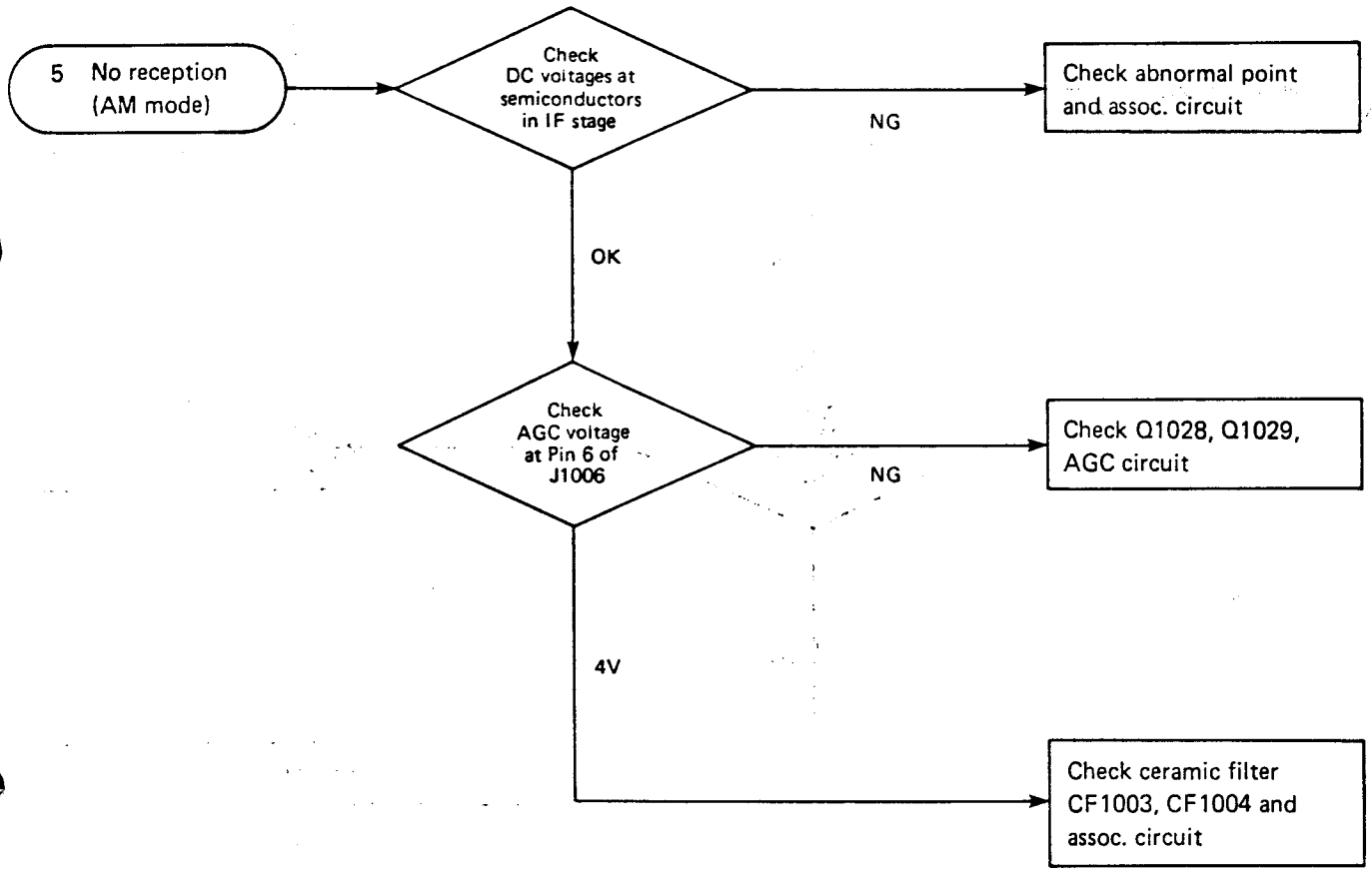
5 No reception
(AM mode)
Check
DC voltages at
semiconductors
in IF stage
NG
Check abnormal point
and assoc. circuit
OK
Check
AGC voltage
at Pin 6 of
J1006
NG
Check Q1028, Q1029,
AGC circuit
4V
Check ceramic filter
CF1003, CF1004 and
assoc. circuit

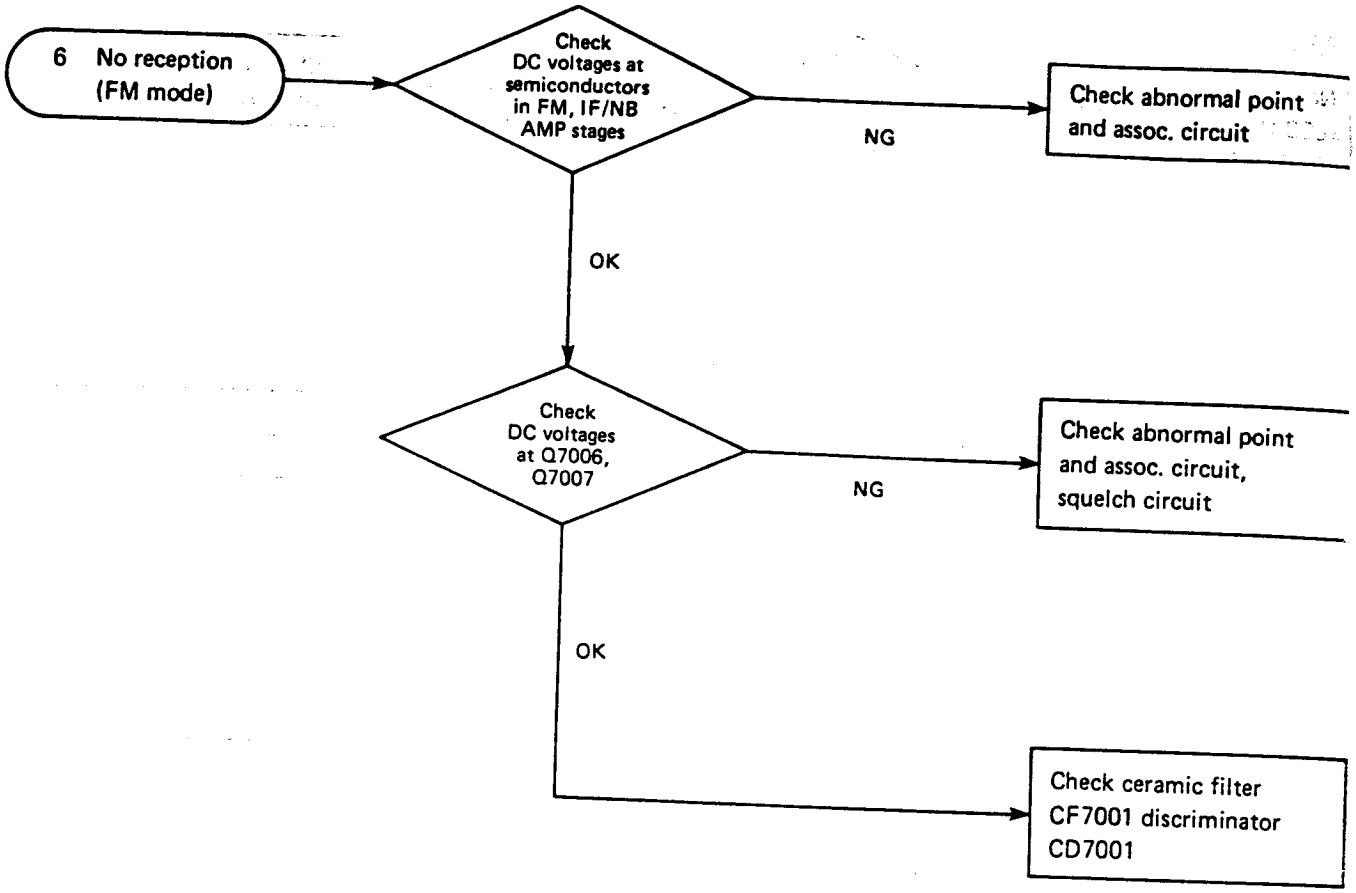
6 No reception (FM mode)
Check DC voltages at semiconductors in FM, IF/NB AMP stages
NG
Check abnormal point and assoc. circuit
OK
Check DC voltages at Q7006, Q7007
NG
Check abnormal point and assoc. circuit, squelch circuit
OK
Check ceramic filter CF7001 discriminator CD7001

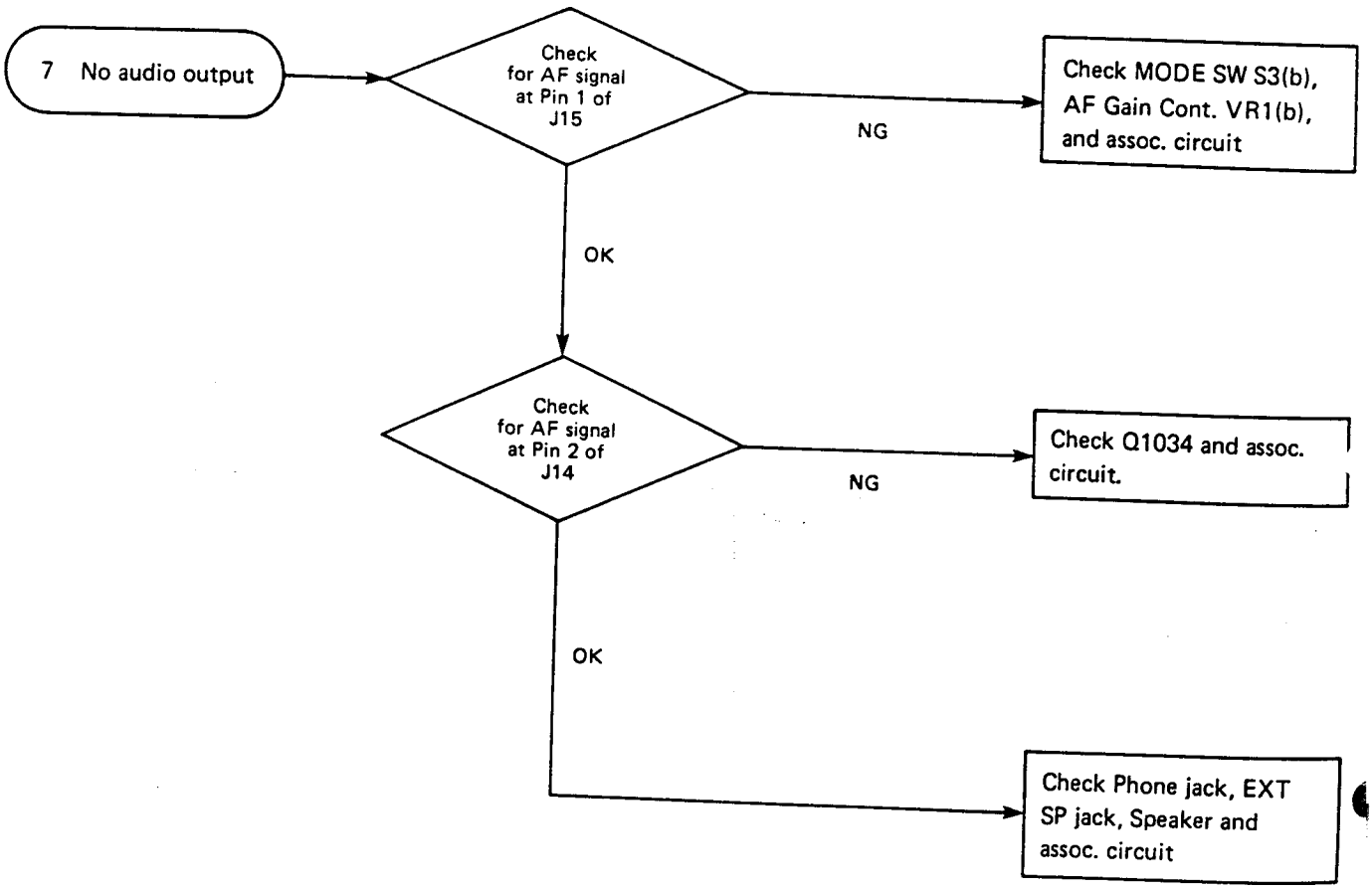
7 No audio output
Check for AF signal at Pin 1 of J15
NG
Check MODE SW S3(b), AF Gain Cont. VR1(b), and assoc. circuit
OK
Check for AF signal at Pin 2 of J14
NG
Check Q1034 and assoc. circuit.
OK
Check Phone jack, EXT SP jack, Speaker and assoc. circuit

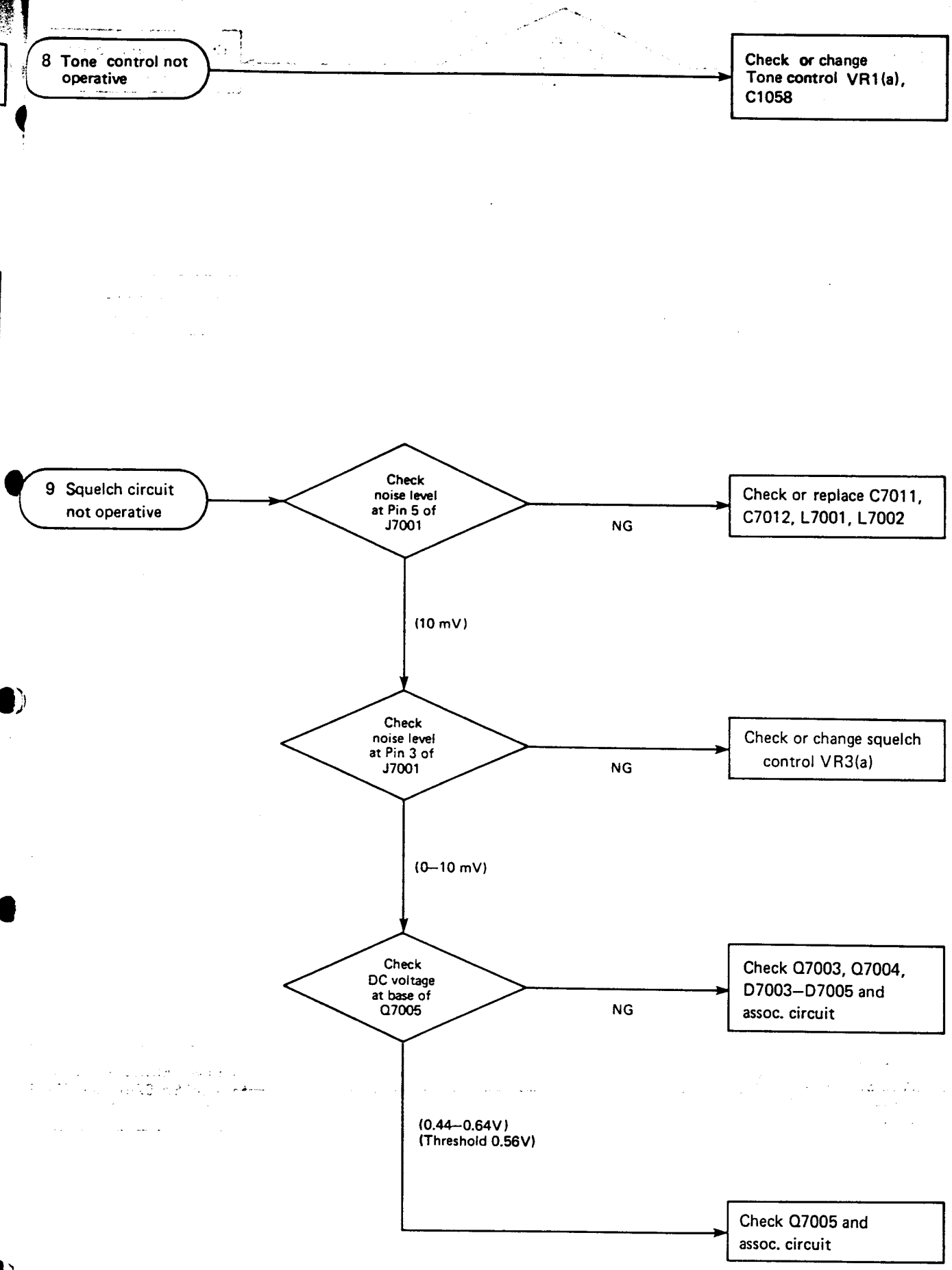
8 Tone control not operative
Check or change Tone control VR1(a), C1058
9 Squelch circuit not operative
Check noise level at Pin 5 of J7001
NG
Check or replace C7011, C7012, L7001, L7002
(10 mV)
Check noise level at Pin 3 of J7001
NG
Check or change squelch control VR3(a)
(0–10 mV)
Check DC voltage at base of Q7005
NG
Check Q7003, Q7004, D7003–D7005 and assoc. circuit
(0.44–0.64V)
(Threshold 0.56V)
Check Q7005 and assoc. circuit

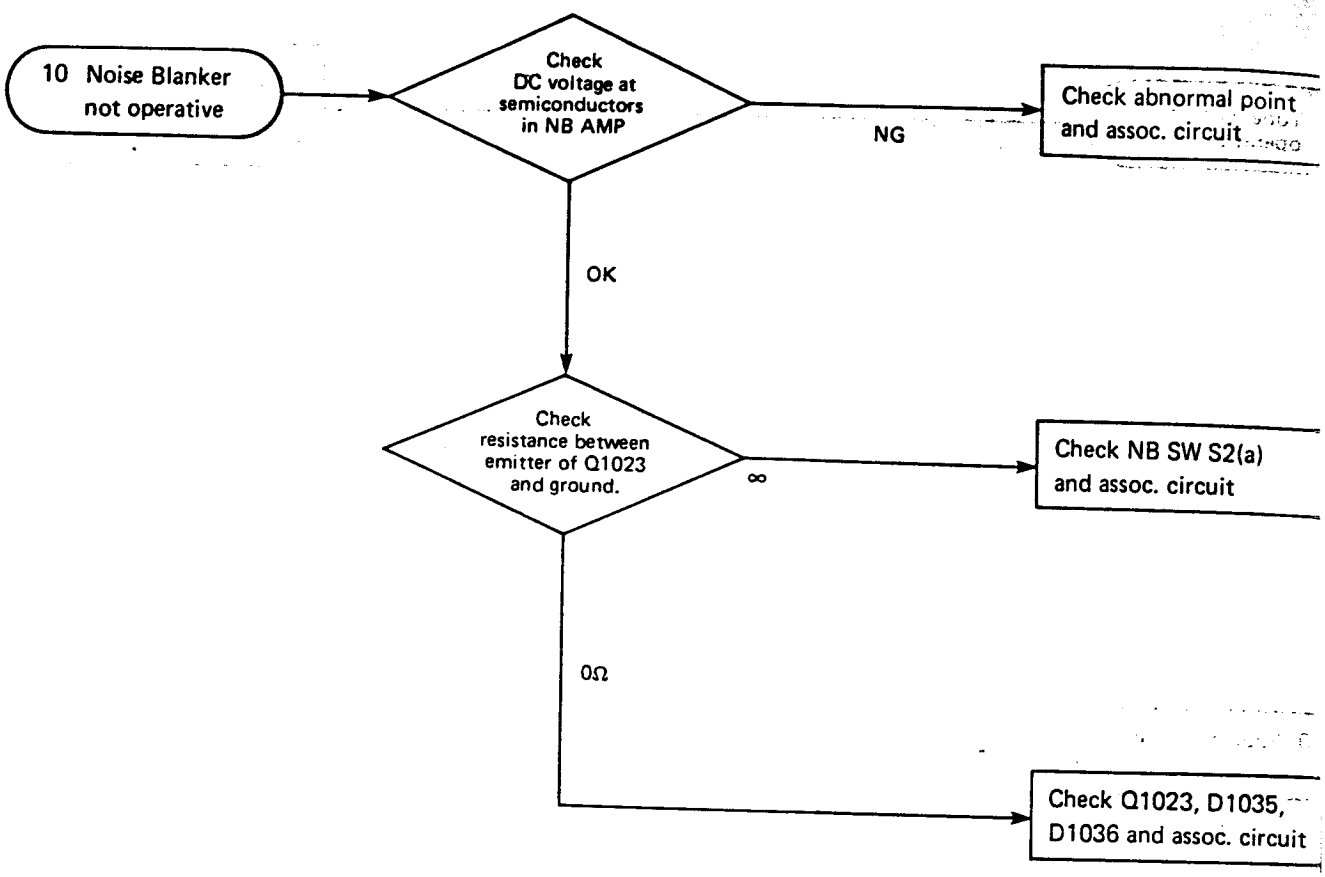
10 Noise Blanker not operative
Check DC voltage at semiconductors in NB AMP
NG
Check abnormal point and assoc. circuit
OK
Check resistance between emitter of Q1023 and ground.
∞
Check NB SW S2(a) and assoc. circuit
0Ω
Check Q1023, D1035, D1036 and assoc. circuit

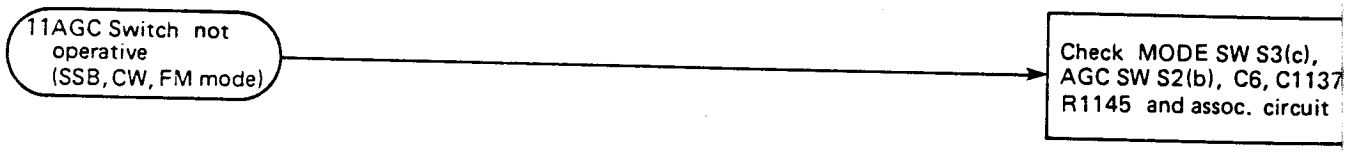
11AGC Switch not operative (SSB, CW, FM mode)
Check MODE SW S3(c), AGC SW S2(b), C6, C1137 R1145 and assoc. circuit

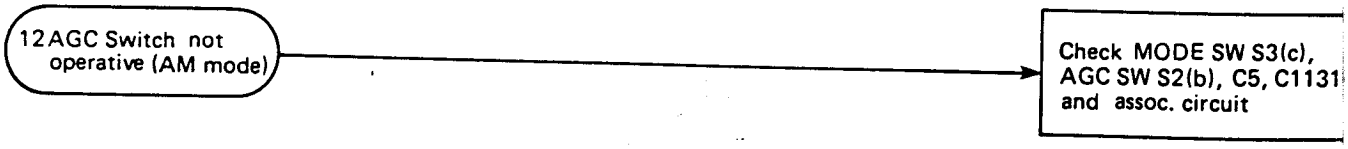
12AGC Switch not operative (AM mode)
Check MODE SW S3(c), AGC SW S2(b), C5, C1131 and assoc. circuit

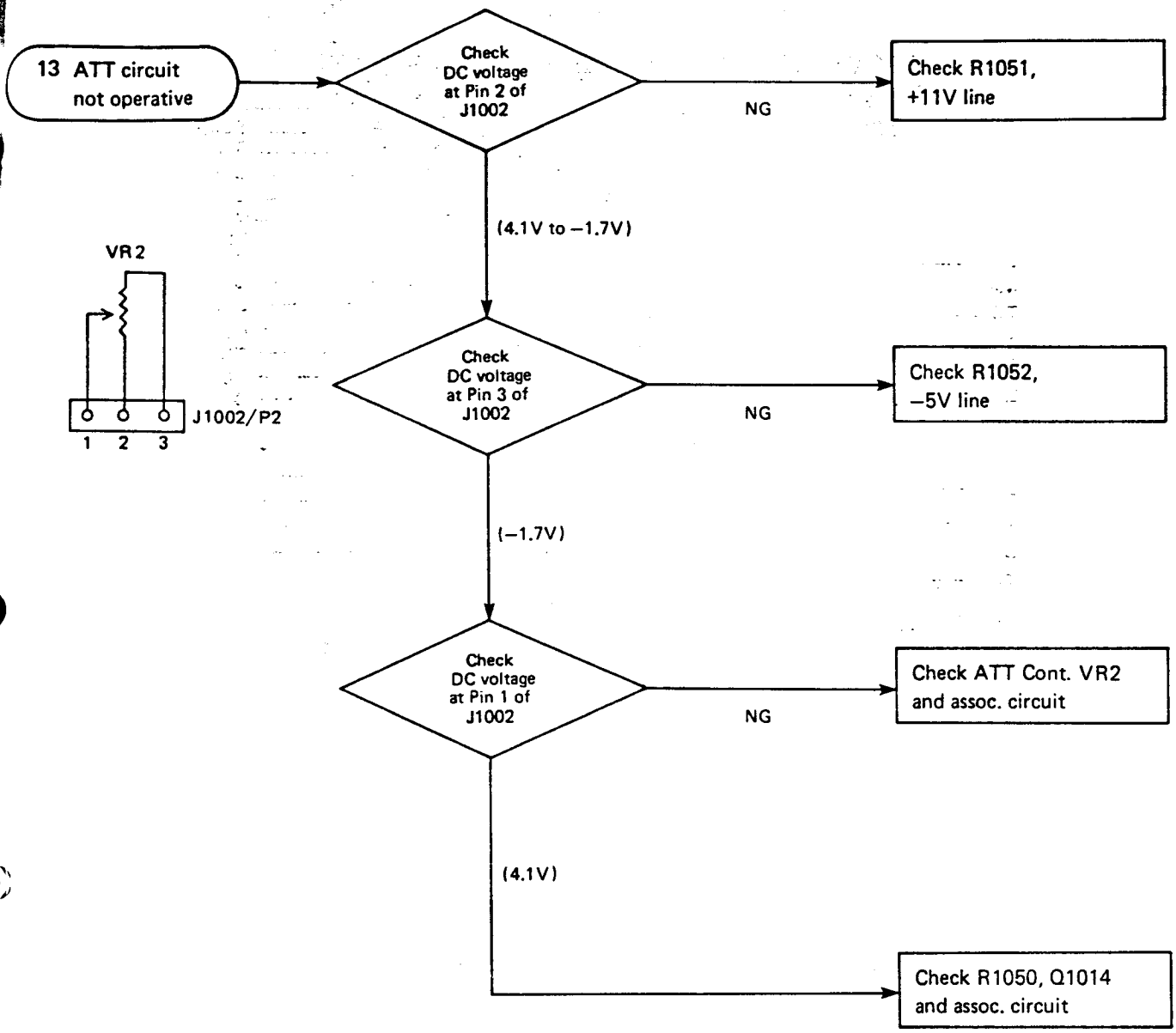
13 ATT circuit not operative
Check DC voltage at Pin 2 of J1002
NG
Check R1051, +11V line
(4.1V to −1.7V)
VR2
J1002/P2
1 2 3
Check DC voltage at Pin 3 of J1002
NG
Check R1052, −5V line
(−1.7V)
Check DC voltage at Pin 1 of J1002
NG
Check ATT Cont. VR2 and assoc. circuit
(4.1V)
Check R1050, Q1014 and assoc. circuit

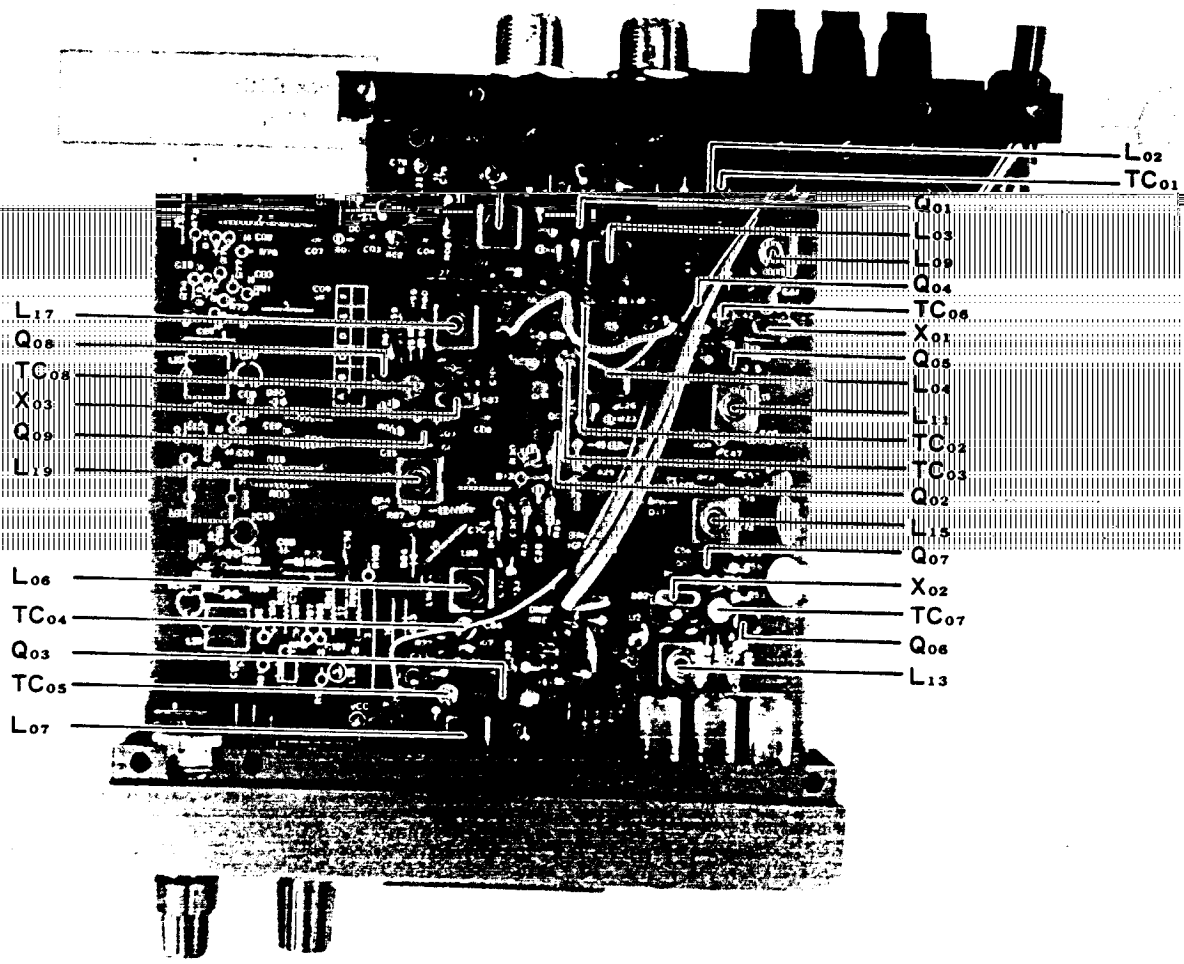

FRV-7700 (Model: A, C)

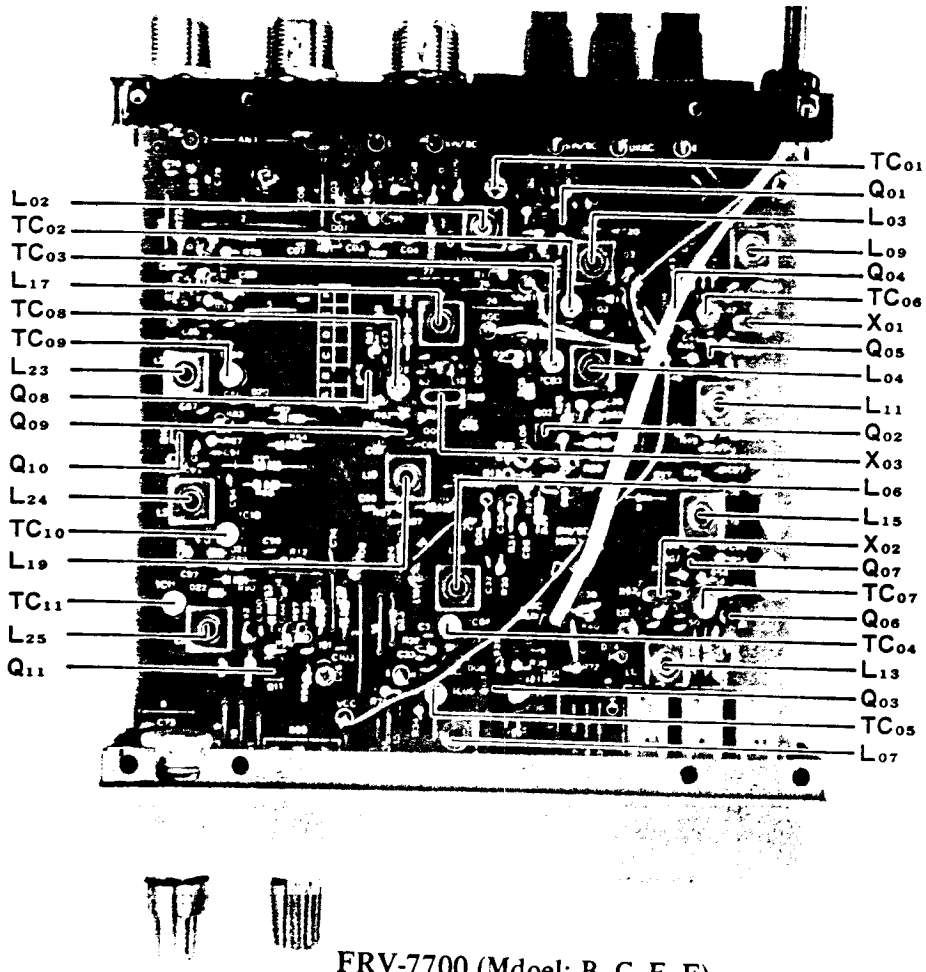

FRV-7700 (Mdoel: B, C, E, F)

PARTS LIST AND ORDERING FORMS

If you live in the United States, you may order parts from Yaesu Electronics Corporation. In other countries, you should order parts from the Yaesu agent for your country. In countries where Yaesu is not currently represented, you may order spare parts directly from Yaesu Musen Company, Ltd. in Tokyo.

When ordering, please specify the exact model number of the transceiver that the part is for. Many parts are standard, such as resistors and disc ceramic capacitors, but you should use particular care when ordering such items as electrolytics, tantalum capacitors, and the like.

The parts list to follow identifies the board that the parts belong to, as well as the circuit designation and part description. A "Part Number" is also specified, and this number will allow immediate identification by our parts department of the item you require. (*See note below.)

Shipment of parts from Yaesu USA is usually made by UPS, COD. Allow at least a week for the parts department to process your order.

PARTS ORDER EXAMPLE

QUANTITY	RECEIVER IDENTIFICATION	LOCATION	*PART NUMBER	CIRCUIT DESIGNATION
1	FRG-7700.	PB-2169	G3801250	Q_{1015} (2SK125)

(cut here)

YAESU MUSEN COMPANY, LTD. – C.P.O. BOX 1500, TOKYO, JAPAN
YAESU ELECTRONICS CORPORATION – P.O. Box 49, Paramount, CA 90723
YAESU ELECTRONICS CORPORATION – 9812 Princeton-Glendale Rd., Cincinnati, OH 45246

ORDER BLANK

QUANTITY	RECEIVER IDENTIFICATION	LOCATION	PART NUMBER	CIRCUIT DESIGNATION

I authorize shipment via: ☐ Best Way ☐ Parcel Post ☐ UPS ☐ Other

Ship To:
(Print or Type)

Name: _____
Address: _____
City: _____ State: _____ Zip: _____
Country: _____

YAESU MUSEN COMPANY, LTD. – C.P.O. BOX 1500, TOKYO, JAPAN
YAESU ELECTRONICS CORPORATION – P.O. Box 49, Paramount, CA 90723
YAESU ELECTRONICS CORPORATION – 9812 Princeton-Glendale Rd., Cincinnati, OH.45246

ORDER BLANK

QUANTITY	RECEIVER IDENTIFICATION	LOCATION	PART NUMBER	CIRCUIT DESIGNATION

I authorize shipment via: ☐ Best Way ☐ Parcel Post
☐ UPS ☐ Other

Ship To:
(Print or Type)
Name: _____
Address: _____
City: _____ State: _____ Zip: _____
Country: _____

(cut here)

YAESU MUSEN COMPANY, LTD. – C.P.O. BOX 1500, TOKYO, JAPAN
YAESU ELECTRONICS CORPORATION – P.O. Box 49, Paramount, CA 90723
YAESU ELECTRONICS CORPORATION – 9812 Princeton-Glendale Rd., Cincinnati, OH 45246

ORDER BLANK

QUANTITY	RECEIVER IDENTIFICATION	LOCATION	PART NUMBER	CIRCUIT DESIGNATION

I authorize shipment via: ☐ Best Way ☐ Parcel Post
☐ UPS ☐ Other

Ship To:
(Print or Type)
Name: _____
Address: _____
City: _____ State: _____ Zip: _____
Country: _____

PARTS LIST

MAIN CHASSIS

Symbol No.	Part No.	Description
	F0002174	Printed Circuit Board
		TRANSISTOR
Q1	G3402880K	2SD288K
		DIODE
D1	G2090147	LED TLG208
D2	G2090151	TLY208
		RESISTOR
R3	J01245470	Carbon film 1/4W TJ 47Ω
R1	J01245680	" " " " 68Ω
R4	J02245102	" " " SJ 1kΩ
R5	J02245103	" " " " 10kΩ
R2	J02245223	" " " " 22kΩ
		POTENTIOMETER
VR1	J62800049	DM10A638A-10kB-10kA
VR2	J60800071	VM10A610E-10kC
VR3	J62800050	DM10A638A-10kBx2
		CAPACITOR
C1,2	K12329002	ECKDAL472PE 150VAC 0.0047μF
C3,4	K13170473	DB207YF473Z5L5 50WV 0.047μF
C5	K40170105	50RL " 1μF
C6	K40140475	25RL4R7 25WV 4.7μF
		POWER TRANSFORMER
PT1	L3030085	
		METER
M1	M0290021	AP-170
		SPEAKER
SP1	M4090044	SE92BYM-2 8Ω 2W
		LAMP
PL1	Q1000045	12V 150mA K0298-4-0
		SWITCH
S1	N4090037	SUF-12 POWER
S2	N4090038	SUF-24 AGC/NB
S3	N0190076	SRN-2046N MODE
S4	N0190074	SRN-1025N DISP
S5	N0190075	SRN-202CN MEM.CH
		RECEPTACLE
J1	P1090028	MBR-06D
J2	P1090004	SG-7814
J3	P1090201	UK-0002
J9	P0090094	PA-125
		TERMINAL BOARD
	Q9000089	TERMINAL BOARD ASS'Y
J5a,b,c	P1090205	UG-0015 #2 (RED)
J5d	P1090211	UG-0015 #1 (Black)
J7	P1090201	UK-0002
J8	P1090206	UC-0007-02
S6	N6090020	OS-22-09S
S7	N0190077	JR-1002-06
FH1	P2000019	FH-032-C

		PLUG
P3,4,9–11,18,19, 21,26,32,33,35, 37,38,40	P1090187	PI051-02F
P2,14,22,39	P1090188	PI051-03F
P1,5,6,12,20,25	P1090153	PI051-04F
P7,8,13,15,16	P1090154	PI051-05F
P17,24	P1090156	PI051-07F
P23,27–29	P1090157	PI051-08F
P30,31	P1090161	PI051-12F
P34	P1090162	PI051-13F
	P2000018	BATTERY SOCKET S1(006P)
	Q9000096	BATTERY CASE C4

MAIN UNIT

Symbol No.	Part No.	Description
PB-2169A	F0002169A	Printed Circuit Board
	C0021690	P.C.B. with Components
		TRANSISTOR, FET & IC
Q1001–1006,1035, 1052–1056	G3107331Q	TR 2SA733A-Q
Q1007–1012,1021, 1022,1026–1033, 1038–1041,1043, 1047–1051,1057, 1058,1060–1062	G3309451Q	" 2SC945A-Q
Q1059	G3313840R	" 2SC1384R
Q1042	G3316740L	" 2SC1674L
Q1023	G3090005	" MPS-A13
Q1015–1018	G3801250	FET 2SK125
Q1014,1019,1020, 1024,1025,1036, 1037		"
Q1034	G1090073	IC μPC575C2
Q1045	G1090084	" μPC78L05A
Q1044	G1090033	" SN74LS196
Q1046	G1090310	" MSM5524
Q1013	G1090309	" MC14555BCP
		DIODE
D1001–1027,1035, 1036,1041–1044, 1047–1052, 1054–1056	G2090027	Si 1SS53
D1034	G2090001	Si 10D1
D1028–1033, 1037–1040,1057	G2090029	Ge 1N60
D1045	G2090156	Zener RD5.6EB-2
D1053	G2090154	Zener RD7.5EB-1
D1046	G2090153	Zener RD10EB-1
		FLUORESCENT TUBE
DS1001	G6090020	FIP5A8B
		CRYSTAL
X1001	H0102336	HC-18/U 3.2768MHz
		CERAMIC OSCILLATOR
CO1001	H7900090	CSB453.5A2 453.5kHz
CO1002	H7900100	CSB456.5A2 456.5kHz
		CRYSTAL FILTER
XF1001	H1102023	XF-48JX 48.055MHz
		CERAMIC FILTER
CF1001	H3900230	CFU455C2

CF1002	H3900041	CFM-455J1
CF1003	H3900240	CFG455H
CF1004	H3900220	LF-H12
		RESISTOR
R1213	J10276339	Carbon composition 1/2W GK 3.3Ω
R1257	J10276689	" " 1/2W GK 6.8Ω
R1163,1248,1252	J00245100	Carbon film 1/4W VJ 10Ω
R1055,1066,1071, 1116,1125,1145, 1183,1191,1244, 1245	J00245220	" " " " 22Ω
R1066	J02245220	" " " TJ 22Ω
R1084	J02245330	" " " SJ 33Ω
R1063,1114,1123, 1181,1189,1258	J02245470	" " " " 47Ω
R1057,1162,1176, 1214	J02245560	" " " " 56Ω
R1058,1062	J02245680	" " " " 68Ω
R1064	J02245750	" " " " 75Ω
R1024,1059, 1072–1075,1077, 1079,1082,1090, 1093,1094,1113, 1117,1122,1129, 1133,1135,1139, 1150,1155,1159, 1180,1188,1194, 1197,1201,1216, 1218,1223,1224, 1225,1236	J02245101	" " " " 100Ω
R1005,1008,1010, 1013,1014,1016, 1017,1019,1020, 1022,1083,1098, 1102,1106,1132	J01245101	" " " TJ 100Ω
R1053	J02245151	" " " SJ 150Ω
R1161,1168,1256	J02245221	" " " " 220Ω
R1086,1087,1221	J02245331	" " " " 330Ω
R1130,1195,1247	J02245391	" " " " 390Ω
R1002,1003,1046, 1060,1061,1076, 1078,1136,1217	J02245471	" " " " 470Ω
R1054,1222	J02245561	" " " " 560Ω
R1109	J02245681	" " " " 680Ω
R1246	J02245821	" " " " 820Ω
R1081,1092,1143, 1200,1206,1235, 1253	J02245102	" " " " 1kΩ
R1144	J01245102	" " " TJ 1kΩ
R1137	J02245122	" " " SJ 1.2kΩ
R1095	J02245152	" " " " 1.5kΩ
R1089,1148,1151, 1154,1158,1164, 1170,1205	J02245222	" " " " 2.2kΩ
R1237–1241	J01245222	" " " TJ 2.2kΩ
R1025,1028,1031, 1034,1037,1040, 1226,1251,1255	J02245332	" " " SJ 3.3kΩ
R1001,1085,1099, 1103,1107,1110, 1202,1228	J02245472	" " " " 4.7kΩ
R1146	J01245472	" " " TJ 4.7kΩ
R1052	J01245512	" " " " 5.1kΩ
R1026,1027,1029, 1030,1032,1033, 1035,1036,1038, 1039,1041,1042, 1097,1101,1105, 1175,1192,1196	J02245562	" " " SJ 5.6kΩ

R1219,1229,1254	J02245562	Carbon film 1/4W SJ 5.6kΩ
R1232,1242,1243	J01245562	" " " TJ 5.6kΩ
R1090,1126,1141, 1169,1198	J02245682	" " " SJ 6.8kΩ
R1051	J02245822	" " " " 8.2kΩ
R1004,1006,1007, 1009,1011,1012, 1015,1018,1021, 1023,1047,1049, 1056,1067,1100, 1104,1108,1112, 1115,1121,1124, 1127,1128,1131, 1140,1153,1157, 1171,1179,1182, 1190,1203,1209, 1210,1212,1230, 1233,1249,1250	J02245103	" " " " 10kΩ
R1048,1111,1187, 1207	J01245103	" " " TJ 10kΩ
R1065,1149	J02245123	" " " SJ 12kΩ
R1069,1220	J02245153	" " " " 15kΩ
R1177	J02245183	" " " " 18kΩ
R1088,1193	J02245223	" " " " 22kΩ
R1165,1204,1227	J02245473	" " " " 47kΩ
R1118,1160,1184, 1215	J02245683	" " " " 68kΩ
R1068,1070,1119, 1120,1134,1138, 1185,1186,1231	J02245104	" " " " 100kΩ
R1167,1234	J02245124	" " " " 120kΩ
R1166	J02245154	" " " " 150kΩ
R1142,1173,1199	J02245224	" " " " 220kΩ
R1208	J01245224	" " " TJ 220kΩ
R1080,1091,1152, 1156,1172	J02245334	" " " SJ 330kΩ
R1147	J02245394	" " " " 390kΩ
R1043–1045	J02245564	" " " " 560kΩ
R1050	J02245225	" " " " 2.2MΩ
		BLOCK RESISTOR
RB1001	J40900019	RA1/16K8R-100kΩ 100kΩx8
RB1002	J40900020	RA1/16K5R-100kΩ 100kΩx5
		POTENTIOMETER
VR1003	J51740501	EVNB3AA00B52 500Ω
VR1002	J50702202	EVLS0A00B23 2kΩ
VR1001	J51721502	EVLS3A00B53 5kΩ
VR1004	J51721203	EVLS3A00B24 20kΩ
		CAPACITOR
C1213	K00172010	DD104SL010C50V02 50WV SL 1pF
C1067	K00172030	DD104SL030C50V02 " " 3pF
C1068	K00173070	DD104SL070D50V02 " " 7pF
C1010,1012	K00175120	DD104SL120J50V02 " " 12pF
C1017,1021	K00175180	DD104SL180J50V02 " " 18pF
C1079	K00175220	DD104SL220J50V02 " " 22pF
C1011,1018,1020	K00175270	DD104SL270J50V02 " " 27pF
C1026,1030,1147, 1151	K00175330	DD104SL330J50V02 " " 33pF

C1027,1029,1212	K00175470	DD104SL470J50V02 50WV SL 47pF
C1019	K00175560	DD104SL56GJ50V02 " " 56pF
C1001,1002,1036, 1038	K00175680	DD104SL680J50V02 " " 68pF
C1035,1039	K00175820	DD104SL820J50V02 " " 82pF
C1162	K10176101	DD104YB101K50V02 " 100pF
C1028,1044,1048, 1051,1054,1056	K00175121	DD105SL121J50V02 " SL 120pF
C1153	K00175151	DD104SL151J50V02 " " 150pF
C1045,1047	K00175181	DD104SL181J50V02 " " 180pF
C1146,1150	K00175221	DD107SL221J50V02 " " 220pF
C1037,1145,1149	K00175271	DD107SL271J50V02 " " 270pF
C1046,1098	K10176471	DD104YB471K50V02 " 470pF
C1052,1053,1221, 1222	K10176561	DD104YB561K50V02 " 560pF
C1185,1186,1227	K10176102	DD104YB102K50V02 " 0.001μF
C1141	K50177222	50F2U222M " 0.0022μF
C1128	K10176332	DD107YB332K50V02 " 3300pF
C1060,1069,1078, 1080,1081,1084, 1089,1094,1095, 1101,1111–1113, 1117,1118,1122, 1123,1125,1143, 1167,1173,1176, 1179,1182,1184, 1187–1189,1193, 1200,1202,1205, 1214,1218,1233	K13170103	DD201YF103Z5L5 " 0.01μF
C1229	K50177223	50F2U223M " 0.022μF
C1003,1005,1007, 1008,1014,1015, 1023,1024,1032, 1033,1041,1042, 1050,1056–1059, 1061–1063,1066, 1070,1072,1074, 1076,1082, 1085–1087, 1090–1093,1099, 1100,1102–1110, 1114–1116, 1119–1121,1124, 1126,1127,1129, 1132,1134,1136, 1140,1154,1156, 1168–1172,1174, 1175,1177,1178, 1180,1181,1183, 1191,1196,1201, 1203,1206,1215, 1216,1228, 1232,1234,1235	K13170473	DB207YF473Z5L5 " 0.047μF
C1144,1159	K50177473	50F2U473M " 0.047μF
C1209	K23170003	RPE112F104V50V " 0.1μF
C1158,1165	K50177104	50F2U104M " 0.1μF
C1071,1073,1138, 1142,1148,1152	K40170105	50RL1 " 1μF
C1190	K40170225	50RL2R2 " 2.2μF
C1160	K40140475	25RL4R7 25W 4.7μF
C1004,1006,1009	K40120106	16RL10 16W 10μF
C1013,1016,1022, 1025,1031,1034, 1040,1043,1049, 1055,1064,1065, 1075,1077,1083, 1088,1096,1097, 1130,1131,1133, 1135,1139,1155, 1157,1192,1195, 1197,1198,1207, 1208,1210,1211, 1217,1219,1220, 1225,1226	K40120106	16RL10 16W 10μF
C1223,1224	K40179014	50RE10 50WV 10μF
C1137, 1163,1239	K40129002	16RE47 16WV 47μF
C1230	K40120107	16RL100 " 100μF
C1161	K40149010	25RE330 25WV 330μF
C1164	K40120477	16RL470 16WV 470μF
C1166	K40149005	25RE1000 25WV 1000μF
C1199	K40120108	16RL1000 16WV 1000μF
		TRIMMER CAPACITOR
TC1001–1003	K91000016	ECV-1ZW50x32 50pF
		INDUCTOR
L1033	L1190113	FL3H R22M 0.22μH
L1001	L1190109	FL3H R33M 0.33μH
L1005	L1190007	FL4H 1R8M 1.8μH
L1004,1006,1010	L1190010	FL4H 3R9K 3.9μH
L1003,1007	L1190111	FL4H 5R6K 5.6μH
L1015	L1190013	FL4H 6R8K 6.8μH
L1009,1011	L1190070	FL4H 8R2K 8.2μH
L1020	L1190014	FL4H 100K 10μH
L1008,1012	L1190112	FL4H 120K 12μH
L1014,1016	L1190021	FL5H 180K 18μH
L1013,1017	L1190023	FL5H 220K 22μH
L1025	L1190073	FL5H 270K 27μH
L1018,1022	L1190025	FL5H 330K 33μH
L1019,1021	L1190027	FL5H 390K 39μH
L1024,1026,1028, 1030	L1190031	FL5H 680K 68μH
L1023,1027	L1190016	FL5H 101K 100μH
L1029	L1190018	FL5H 121K 120μH
L1039–1042	L1190020	FL5H 151K 150μH
L1036	L1190001	EL0710 251K 250μH
L1032	L1190114	FL5H 821K 820μH
L1002,1034,1035, 1038,1043,1044	L1190017	FL5H 102K 1mH
L1031	L1190040	S4 1mH 1mH
	L9190016	Shield Case (7mm)
		TRANSFORMER
T1001	L0020789A	
T1002	L0020863	
T1003	L0020883	
T1004,1007	L0020858	
T1005	L0020857	
T1006	L0020858	
T1008	L0020860	
T1009,1010	L0020861	
T1011–1017	L0190002	7MC-312162NO
T1018	L3030086	DC-DC CONV.
		RELAY
RL1001	M1190006	FBR221AD012

		CONNECTOR
J1003,1006,1007, 1013,1014,1018	P0090120	PI051-02M
J1002,1010,1015, 1020	P0090121	PI051-03M
J1001,1004,1008	P0090132	PI051-04M
J1005,1009,1011	P0090133	PI051-05M
J1012,1017	P0090135	PI051-07M
J1016	P0090136	PI051-08M
J1019	P1090196	FJ-10-001
	Q5000011	Wrapping Terminal C

PLL UNIT

Symbol No.	Part No.	Description	
PB-2170A	F0002170A	Printed Circuit Board	
	C0021700	P.C.B with Components	
		TRANSISTOR, IC	
Q2004–2007	G3107331Q	TR	2SA733A-Q
Q2016	G3305351	"	2SC535A
Q2026,2027	G3309000E	"	2SC900E
Q2001,2002, 2008–2011,2014, 2015,2018, 2020–2024,2028, 2029,2031,2032, 2037,2039,2040	G3309451Q	"	2SC945A-Q
Q2012	G3310473	"	2SC1047C
Q2044,2045	G3313840R	"	2SC1384R
Q2017,2035	G3313930L	"	2SC1393L
Q2034	G3316740L	"	2SC1674L
Q2013	G3319590Y	"	2SC1959Y
Q2043	G3408820Q	"	2SD882Q
Q2042	G1090153	IC	MB8718
Q2041	G1090311	"	MB84040B
Q2036	G1090296	"	HD10551
Q2025	G1090087	"	MC4044P
Q2038	G1090312	"	MC14504BCP
Q2003	G1090128	"	MC14556BCP
Q2019,2030,2033	G1090012	"	SN16913P
		DIODE	
D2001–2020	G2090027	Si	1SS53
D2021–2025	G2090043	Varactor	MV-104
D2027,2028	G2090156	Zener	RD5.6EB2
D2026	G2090155	Zener	RD9.1EB2
		CRYSTAL	
X2001	H0102337	HC-18/U	47.6MHz
X2002	H0102338	"	6.4MHz
		RESISTOR	
R2139	J10276479	Carbon composition	1/2W TJ 4.7Ω
R2123,2141,2143	J02245100	Carbon film	1/4W SJ 10Ω
R2083–2085	J02245150	" "	" " 15Ω
R2040,2043	J02245330	" "	" " 33Ω
R2044	J02245560	" "	" " 56Ω
R2121	J02245820	" "	" " 82Ω
R2014,2021,2028, 2035,2042,2045	J02245101	" "	" " 100Ω
R2048,2050,2053, 2055,2061,2063, 2067,2070,2072, 2075,2076,2080, 2081,2088,2098, 2102,2107,2108, 2114,2115,2120, 2130,2135,2140, 2145–2147	J02245101	Carbon film	1/4W SJ 100Ω
R2077	J02245151	" "	" " 150Ω
R2117	J02245181	" "	" " 180Ω
R2062, 2124	J02245221	" "	" " 220Ω
R2089,2142,2144	J02245331	" "	" " 330Ω
R2041,2049,2054, 2066,2071,2082, 2095,2109,2116	J02245391	" "	" " 390Ω
R2013,2020,2027, 2034,2104,2136	J02245471	" "	" " 470Ω
R2094,2122	J02245561	" "	" " 560Ω
R2015,2022,2029, 2036,2037,2039, 2058,2110,2119, 2126,2131,2132	J02245102	" "	" " 1kΩ
R2091,2137	J02245152	" "	" " 1.5kΩ
R2005–2008,2038, 2073,2096,2118, 2125,2134	J02245222	" "	" " 2.2kΩ
R2138,2148,2149	J02245272	" "	" " 2.7kΩ
R2057.2060,2092 2093,2097	J02245472	" "	" " 4.7kΩ
R2011,2018,2025, 2032,2046,2069, 2079,2103,2105, 2112,2129	J02245103	" "	" " 10kΩ
R2012,2019,2026, 2033,2047,2056, 2059,2068,2078, 2101,2106,2113, 2128	J02245223	" "	" " 22kΩ
R2002,2004 2086,2087	J02245473	" "	" " 47kΩ
R2074	J02245683	" "	" " 68kΩ
R2001,2003,2009, 2010,2016,2017, 2023,2024,2030, 2031,2051,2065, 2090,2099,2100, 2111,2133	J02245104	" "	" " 100kΩ
R2127	J02245154	" "	" " 150kΩ
		BLOCK RESISTOR	
RB2001	J40900017	RA1/16-6R1MΩ 1/16W 1MΩx6	
		CAPACITOR	
C2048,2062	K00179001	DD104SL0R5C50V02	50WV SL 0.5pF
C2085,2111,2127	K00172010	DD104SL010C50V02	" " 1pF
C2148	K00172020	DD104SL020C50V02	" " 2pF
C2034,2045	K00172030	D104SL030C50V02	" " 3pF
C2070,2073,2081, 2112,2139	K00172050	DD104SL050C50V02	" " 5pF
C2010,2017,2168	K06172050	DD104UJ050C50V02	" UJ 5pF
C2049,2086	K00173060	DD104SL060D50V02	" SL 6pF

C2108	K06173060	DD104UJ060D50V02 50WV UJ 6pF
C2142	K00173080	DD104SL080D50V02 " SL 8pF
C2043,2044,2063, 2071,2072	K00173100	DD104SL100D50V02 " SL 10pF
C2008,2015,2022, 2028,2105,2106	K06173100	DD104UJ100D50V02 " UJ 10pF
C2146	K00175120	DD104SL120J50V02 " SL 12pF
C2033,2128,2141	K00175150	DD104SL150J50V02 " " 15pF
C2144	K00175180	DD104SL180J50V02 " " 18pF
C2040,2042,2055, 2058,2082,2149, 2175	K00175220	DD104SL220J50V02 " " 22pF
C2169	K02179009	DD104CH220J50V02 " CH 22pF
C2054	K06175220	DD104UJ220J50V02 " UJ 22pF
C2039,2041,2145	K00175270	DD104SL270J50V02 " SL 27pF
C2143	K00179007	DD104SL300J50V02 " " 30pF
C2009,2016,2023, 2029,2107	K06175330	DD104UJ330J50V02 " UJ 33pF
C2147	K00179008	DD104SL360J50V02 " SL 36pF
C2077,2078	K02179014	DD106CH360J50V02 " CH 36pF
	K06175390	DD104UJ390J50V02 " UJ 39pF
C2007,2014,2021, 2027	K06175470	DD104UJ470J50V02 " " 47pF
C2119,2121	K00179510	DD104SL510J50V02 " SL 51pF
C2120	K00175101	DD105SL101J50V02 " " 100pF
C2170,2171	K02175151	DD109CH151J50V02 " CH 150pF
C2133	K30176271	Z17D271K05 " 270pF
C2150	K10176391	DD104YB391K50V02 " 390pF
C2061,2156	K12171102	DD105E102P50V02 " 0.001μF
C2001,2011,2013, 2018,2020,2024, 2026,2030,2032, 2035–2038,2046, 2047,2050–2053, 2056,2059, 2064–2069, 2074–2076,2080, 2083,2084, 2081–2091, 2093–2096,2098, 2100,2109, 2113–2118,2124, 2125,2129,2131, 2132,2134, 2136–2138,2140, 2152,2153,2155, 2158,2160,2164, 2165,2172,2174, 2176,2181,2193	K13170103	DB201YF103Z5L5 " 0.01μF
C2002–2006,2057, 2060,2079,2092, 2097,2099,2104, 2126,2130,2135, 2154,2157,2161	K13170473	DB207YF473Z5L5 " 0.047μF
C2163,2166,2167, 2173,2177,2178, 2182,2184,2186, 2188–2192	K13170473	DB207YF473Z5L5 50WV 0.047μF
C2101,2102,2183, 2185,2187	K40170105	50RL1 " 1μF.
C2180	K40140475	25RL4R7 25WV 4.7μF
C2103,2110,2159, 2162,2179	K40129004	16RE10 16WV 10μF
C2012,2019,2025, 2031	K40109002	10RE47 10WV 47μF
		TRIMMER CAPACITOR
TC2001,2002	K91000029	ECV1ZW20x53 20pF
		INDUCTOR
L2002,2003,2005	L1190113	FL-3H R22M 0.22μH
L2001,2004	L1190011	FL-4H R47M 0.47μH
L2037	L1190013	FL-4H R68M 0.68μH
L2010–2012	L1190009	FL-4H 3R3M 3.3μH
L2031	L1190014	FL-5H 100K 10μH
L2028,2029	L1190025	FL-5H 330K 33μH
L2021,2022	L1190027	FL-5H 390K 39μH
L2006,2007,2015	L1190029	FL-5H 470K 47μH
L2008,2009,2014, 2016,2020,2023, 2030,2033,2035	L1190020	FL-5H 151K 150μH
L2013,2017–2019, 2032,2034,2036	L1190017	FL-5H 102K 1mH
L2024,2026	L0020882	L.P.F
L2025	L0020871	L.P.F
L2027	L0020873	L.P.F
		TRANSFORMER
T2001	L0020869	
T2002	L0020868	
T2003	L0020867	
T2004	L0020866	
T2005	L0020110	R12-4797
T2006	L0020127	R12-4094A
T2007	L0020862	
T2008	L0020209	
		SWITCH
S2001	N0190072	CB-1-2-40
		CONNECTOR
J2004–2006,2008, 2009	P0090120	PI051-02M
J2007	P0090121	PI051-03M
J2010	P0090132	PI051-04M
J2001	P0090133	PI051-05M
J2002	P0090136	PI051-08M
J2003	P0090140	PI051-12M
	Q5000011	Wrapping terminal C

FM UNIT

Symbol No.	Part No.	Description
PB-2176	F0002176	Printed Circuit Board
	C0021760	P.C.B with Components
		TRANSISTOR & IC
Q7001,7003–7007	G3309451Q	TR 2SC945A-Q
Q7002	G1090059	IC TA-7061AP
		DIODE
D7001–7004	G2001880F	Ge 1S188FM
D7005	G2090027	Si 1SS53
		THERMISTOR
TH7001	G9090001	SDT-250
		CERAMIC FILTER
CF7001	H3900030	LFB-15
		CERAMIC DISCRIMINATOR
CD7001	H7900010	455D
		RESISTOR
R7022	J02245470	Carbon film 1/4W SJ 47Ω
R7003,7005,7007, 7012,7029,7030	J02245101	" " " " 100Ω
R7017	J02245221	" " " " 220Ω
R7001	J02245102	" " " " 1kΩ
R7019,7023	J02245152	" " " " 1.5kΩ
R7004,7006,7008, 7011	J02245222	" " " " 2.2kΩ
R7028	J02245472	" " " " 4.7kΩ
R7013,7015,7018	J02245562	" " " " 5.6kΩ
R7026,7027	J02245682	" " " " 6.8kΩ
R7009,7010,7021, 7031,7032	J02245103	" " " " 10kΩ
R7020,7024	J02245823	" " " " 82kΩ
R7025	J02245104	" " " " 100kΩ
R7002	J02245224	" " " " 220kΩ
R7014,7016	J02245564	" " " " 560kΩ
		CAPACITOR
C7017	K00179005	DD104SL200J50V02 50WV SL 20pF
C7027	K00175101	DD105SL101J50V02 " " 100pF
C7010,7016	K12171102	DD105E102P50V02 " 0.001μF
C7028	K13170472	DB201YF472Z5L5 " 0.0047μF
C7001,7003,7004, 7009,7014,7015, 7019,7026,7029	K13170103	DB201YF103Z5L5 " 0.01μF
C7018	K13170223	DD109F223Z50V02 " 0.022μF
C7011,7012	K50177223	50F2U223M " 0.022μF
C7002,7005–7008, 7020	K13170473	DB207YF473Z5L5 " 0.047μF
C7013	K70167224	CS15E1VR22M 35WV 0.22μF
C7024,7025	K40170105	50RL1 50WV 1μF
C7022,7023	K40140475	25RL4.7 25WV 4.7μF
C7021,7030,7031	K40120106	16RL10 16WV 10μF

		INDUCTOR
L7001,7002	L1190017	FL5H 102K 1mH
		CONNECTOR
J7001	P0090167	PI011-08M 8P

VFO UNIT

Symbol No.	Part No.	Description
PB-2172	F0002172	Printed Circuit Board
	C0021720	P.C.B with Components
		TRANSISTOR
Q3001–3003	G3309451Q	2SC945A-Q
		RESISTOR
R3015	J02245330	Carbon film 1/4W SJ 33Ω
R3007,3010–3012, 3016	J02245101	" " " " 100Ω
R3004,3008,3009, 3014	J02245102	" " " " 1kΩ
R3003	J02245222	" " " " 2.2kΩ
R3001	J02245183	" " " " 18kΩ
R3005	J02245223	" " " " 22kΩ
R3002	J02245333	" " " " 33kΩ
R3006	J02245104	" " " " 100kΩ
R3013	J02245154	" " " " 150kΩ
		CAPACITOR
C3008	K02173100	DD104CH100D50V02 50WV CH 10pF
C3003	K06179009	DD105UJ560J50V02 " " 56pF
C3004	K02175101	DD107CH101J50V02 " " 100pF
C3002	K02179019	DD107CH910J50V02 " CH 91pF
C3007	K30176681	LCQ18681K05 " 680pF
C3013,3014	K10176681	DD104B681K50V02 " 680pF
C3006	K30209001	DM19D102K1 100WV 1000pF
C3001	K30209006	DM19D242K1 " 2400pF
C3005,3010,3012	K13170103	DB201YF103Z5L5 50WV 0.01μF
C3009,3011,3015, 3016	K13170473	DB207YF473Z5L5 " 0.047μF
		VARIABLE CAPACITOR
VC3001	K90000034	C-613A132
		TRIMMER CAPACITOR
TC3001	K91000013	ECV-1ZW20x32 50pF
		INDUCTOR
L3001	L0020062	R12-5775
L3003	L1190009	FL4H 3R3M 3.3μH
L3002	L1190016	FL5H 101K 100μH
		LAMP
PL3001	Q1000043A	K0298-4-0 12V, 100mA
		TERMINAL
	Q5000020	MS-60121

SWITCH UNIT

Symbol No.	Part No.	Description
PB-2173	F0002173	Printed Circuit Board
	C0021730	P.C.B with Components
		TRANSISTOR
Q4001,4002	G3309451Q	2SC945A-Q
		DIODE
D4001,4002	G2090134	LED TLY-205
		RESISTOR
R4008	J20336100	Metallic film 2W 10Ω
R4004	J01245391	Carbon film 1/4W TJ 390Ω
R4005,4006	J01245681	" " " " 680Ω
R4002,4003,4007	J01245102	" " " " 1kΩ
R4001	J01245562	" " " " 5.6kΩ
		SWITCH
S4001–4004	N5090003	KEF-10901
S4005	N4090039	SUT-42A
	T9203650	FLAT CABLE

POWER SUPPLY UNIT

Symbol No.	Part No.	Description
PB-2171A	F0002171A	Printed Circuit Board
	C0021710	P.C.B with Components
		TRANSISTOR
Q5001–5003	G3309451Q	2SC945A-Q
		DIODE
D5001	G2090157	Si S2VB10F
D5002	G2090158	Zener RD4.7EB2
D5003	G2090159	Si S2V10
		RESISTOR
R5005	J02245331	Carbon film 1/4W SJ 330Ω
R5003,5004	J02245471	" " " " 470Ω
R5002	J02245122	" " " " 1.2kΩ
R5001	J02245182	" " " " 1.8kΩ
R5007	J02245472	" " " " 4.7kΩ
R5006	J02245682	" " " " 6.8kΩ
		CAPACITOR
C5006	K13170473	DB207YF473Z5L5 50WV 0.047μF
C5004	K40170105	50RL1 " 1μF
C5003,5005	K40120106	16RL10 16WV 10μF
C5002	K40120336	16RL33 " 33μF
C5001	K40149013	RPE-25V682M 25WV 6800μF
		CONNECTOR
J5001–5003	P0090120	PI051-02M
J5004	P0090132	PI051-04M
	Q5000011	Wrapping terminal C

MEMORY UNIT (OPTION)

Symbol No.	Part No.	Description
PB-2175A	F0002175A	Printed Circuit Board
	C0021750	P.C.B with Components
		TRANSISTOR, FET & IC
Q6036	G3107331Q	TR 2SA733A-Q
Q6017,6018	G3309000E	" 2SC900E
Q6005,6015,6016, 6029	G3309451Q	" 2SC945A-Q
Q6014	G3313170R	" 2SC1317R
Q6003,6006	G3316740L	" 2SC1674L
Q6013,6037	G3408820Q	" 2SD882Q
Q6001,6002	G3801070C	FET 2SK107-3
Q6028	G4800730G	" 3SK73GR
Q6004	G1090313	IC μPB553C
Q6030–6035	G1090227	" μPD5101LC
Q6007	G1090296	" HD10551
Q6008	G1090100	" SN74LS123
Q6009–6012	G1090019	" SN74LS192
Q6025	G1090317	" SN74LS290
Q6021	G1090315	" SN74LS293
Q6020,6022	G1090165	" MC14024BCP
Q6019	G1090314	" MC14046BCP
Q6023	G1090126	" MC14069UBCP
Q6026,6027	G1090108	" MC14518BCP
Q6024	G1090316	" MSM4023RS
		DIODE
D6001,6002	G2090073	Varactor FC-52M
D6007	G2090040	Varactor FC-63
D6003,6010	G2090156	Zener RD5.6EB2
D6004	G2090153	Zener RD10EB1
D6005,6006,6008, 6009	G2090027	Si 1SS53
D6011,6012	G2090029	Ge 1N60
		CRYSTAL
X6001	H0102339	HC-18/U, 3P 16.384MHz
		RESISTOR
R6027	J20306100	Metallic film 1W 10Ω
R6029	J02245100	Carbon film 1/4W SJ 10Ω
R6019	J02245270	" " " " 27Ω
R6060	J20306330	Metallic film 1W 33Ω
R6005,6011,6012, 6017,6020,6023, 6030,6035,6042, 6055,6056	J02245100	Carbon film 1/4W SJ 100Ω
R6001,6004,6025, 6026,6028	J02245221	" " " " 220Ω
R6013,6024	J02245391	" " " " 390Ω
R6018	J02245471	" " " " 470Ω
R6067	J02245561	" " " " 560Ω
R6036,6038,6058, 6062	J02245102	" " " " 1kΩ
R6041	J02245182	" " " " 1.8kΩ
R6014,6043	J02245222	" " " " 2.2kΩ
R6063–6066	J02245272	" " " " 2.7kΩ
R6068	J10246332	" composition " GK 3.3kΩ
R6040	J02245562	" film " SJ 5.6kΩ
R6034,6046,6049, 6053,6059	J02245103	" " " " 10kΩ
R6010,6015,6022	J02245183	" " " " 18kΩ
R6009,6016,6021, 6031,6033,6051	J02245223	" " " " 22kΩ
R6050	J02245333	" " " " 33kΩ

R6052	J02245393	Carbon film 1/4W SJ 39kΩ
R6002,6003,6006, 6007	J02245473	" " " " 47kΩ
R6008,6032,6044	J02245104	" " " " 100kΩ
R6037	J02245124	" " " " 120kΩ
R6045	J02245154	" " " " 150kΩ
R6057	J02245184	" " " " 180kΩ
R6061	J02245224	" " " " 220kΩ
		BLOCK RESISTOR
RB6001	J40900018	RA1/16K9R100kΩ 1/16W 100kΩx9
		CAPACITOR
C6044	K06173060	DD104UJ060D50V02 50WV UJ 6pF
C6001,6002	K02173070	DD104CH070D50V02 " CH 7pF
C6011,6027,6069	K00175120	DD104SL120J50V02 " SL 12pF
C6012	K00175270	DD104SL270J50V02 " " 27pF
C6043	K06175330	DD104UJ330J50V02 " UJ 33pF
C6067	K00175560	D104SL560J50V02 " SL 56pF
C6049	K02175560	DD106CH560J50V02 " CH 56pF
C6045	K06179009	DD105UJ560J50V02 " UJ 56pF
C6046	K02175151	DD109CH151J50V02 " " 150pF
C6023,6025	K10176561	DD104B561K50V02 " 560pF
C6022,6026	K10176821	DD104B821K50V02 " 820pF
C6003,6004,6006, 6007,6008,6010, 6013,6014,6030, 6031,6068	K12171102	DD105E102P50V02 " 0.001μF
C6024	K10179022	2222-660-02272 " 2700μF
C6009,6016–6021, 6029,6033,6034, 6038,6042,6047, 6048,6054–6059, 6061	K14179002	RD204YM0.01μF " 0.01μF
C6053	K50177103	50F2U103M " 0.01μF
C6005,6036,6051, 6070–6073	K13170473	DB207YF473Z5L5 " 0.047μF
C6064	K23170003	RPE112F104Z50V " 0.1μF
C6050	K54200001	B32561-A1105J 100WV 1μF
C6015,6032,6035, 6039,6060,6066	K40120106	16RL10 16WV 10μF
C6052,6062	K40120226	16RL22 16WV 22μF
C6063,2065	K40149003	25RE100 25WV 100μF
C6041	K40120227	16RL220 16WV 220μF
C6040	K40129031	16RC470 " 470μF
C6037	K40089004	6.3RE1000 6.3WV 1000μF
		MODULE
RCM6001	Q80000005	RK1/16R-11R100kΩ/103Z50 (1/16W 100kx11, 50WV 0.01μFx11)

		INDUCTOR
L6006	L1190005	FL4H IR0M 1μH
L6004,6008	L1190009	FL4H 3R3M 3.3μH
L6005,6007	L1190111	FL4H 5R6K 5.6μH
L6001,6002,6009, 6012,6014	L1190020	FL5H 151K 150μH
L6003,6010,6016	L1190017	FL5H 102K 1mH
L6011	L2030067B	S/N COIL 3mH
L6013,6015	L1190035	FL7H 392J 3.9mH
		TRANSFORMER
T6001	L0020110	R12-4797A
T6002	L0020864	VCO COIL
T6003	L0020865	"
		CONNECTOR
J6006	P0090120	PI051-02M 2P
J6004	P0090132	PI051-04M 4P
J6001	P0090133	PI051-05M 5P
J6005	P0090136	PI051-08M 8P
J6003	P0090140	PI051-12M 12P
J6002	P0090141	PI051-13M 13P
	Q5000011	Wrapping terminal C

ACCESSORIES

Symbol No.	Part No.	Description
	Q3000004A	Wire Antenna
	R3054620	FOOT H-30
	Q0000002	Fuse 1A (AC100-120V)
	Q0000001	0.5A (AC200-240V)
		AC POWER CORD
	T9013280	2 wire, 2 prong plug DC-546-007
	T9013282	3 wire, 3 prong plug (UL) UC-904-016
	T9013284	3 wire, 2 prong EU plug EC-407-007
	T9013283	3 wire, 3 prong Australian plug SC-411-001
	S3000023	Mini Belt C

FRT-7700

Symbol No.	Part No.	Description
PB-2246	F0002246	Printed Circuit Board
	C0022460	PCB with components
		RESISTOR
R7,9,10,12	J02245470	Carbon film 1/4W SJ 47Ω
R4,6	J02245560	" " " " 56Ω
R2	J02245680	" " " " 68Ω
R1,3	J02245101	" " " " 100Ω
R5	J02245221	" " " " 220Ω
R13	J02245102	" " " " 1kΩ
R8	J02245272	" " " " 2.7kΩ
R14	J02245332	" " " " 3.3kΩ
R11	J02245273	" " " " 27kΩ
R15	J02245473	" " " " 47kΩ
R16	J02245474	" " " " 470kΩ
		CAPACITOR
C1,3	K10176681	Ceramic disc 50WV 680pF (DD104-B681K)
C2	K10176122	" " " 1200pF (DD105-B122K)
		VARIABLE CAPACITOR
VC1	K90000037	CB21G112
PB-2247	F0002247	VC1 Mounting Board
		INDUCTOR
L1	L0020988	
L2	L0020989	
L3	L0020990	
L4	L0020991	
L5	L0020992	
L6	L0020993	
L7,8	L1190038	FL5H-271K 270μH
		SWITCH
S1	N0190086	SBU1024N
S2	N0190087	SRZW66S
S3	N0190088	SRZW45S
S4	N4090043	SUF31
		CONNECTOR
J1	P1090194	MBR06B
J2	Q9000122	UG0033
		KNOB
	R3065270	FT-16PNAK ATT, BAND, MATCHING
	R3065260	FT-16PAK TUNING
	R3056500	PUSH KNOB A

Symbol No.	Part No.	Description
PB-2215A	F0002215A	Printed Circuit Board
	C0022150	PCB with components
		CAPACITOR
C1,5	K10176821	Ceramic disc 50WV 820pF (DD104-B821K)
C2,3,4	K10176152	" " " 150pF (DD105-B152K)
		INDUCTOR
L1,3	L1190024	FL5H-221K 220μH
L2,4	L1190038	FL5H-271K 270μH
		CONNECTOR
J1	Q9000121	UG0013

FRV-7700

Symbol No.	Part No.	Description
PB-2298	F0002298	Printed Circuit Board
	C0022981	• PCB with components (Model A)
	C0022982	▲ " (Model B)
	C0022983	■ " (Model C)
	C0022984	★ " (Model D)
	C0022985	○ " (Model E)
	C0022986	□ " (Model F)
		FET
Q1,2▲,10★○□, 11▲★○□	G4800730G	3SK73GR
		TRANSISTOR
Q3–9	G3319230R	2SC1923R
		DIODE
D1,2,18▲★○□, 19▲★○□	G2090044	Si MC301
D6,9–11,13,14, 16,17,12●■, 15●■,23▲★○□, 24▲★○□	G2090027	" 1SS53
D3–5, 20▲★○□–22▲★○□	G2022080	Varactor 1S2208
D7,8	G2090023	" 1SV50
		CRYSTAL
X1●▲★ (Model A,B,D)	H0102423	HC-18/U 100MHz
X1■○(Model C,E)	H0102425	" 120MHz
X1□(Model F)	H0102426	" 130MHz
X2●(Model A)	H0102424	" 110MHz
X2▲★(Model B,D)	H0102425	" 120MHz
X2■○(Model C,E)	H0102426	" 130MHz

• MODEL A, ▲ MODEL B, ■ MODEL C, ★ MODEL D, ○ MODEL E, □ MODEL F

X2□(Model F)	H0102427	HC-18/U 140MHz
X3●(Model A)	H0102425	" 120MHz
X3▲(Model B)	H0102421	" 30MHz
X3■(Model C)	H0102427	" 140MHz
X3★(Model D)	H0102422	" 50MHz
X3○□(Model E,F)	H0102423	" 100MHz
		RESISTOR
R39	J02245010	Carbon film 1/4W SJ 1Ω
R15,17,25,86★	J02245279	" " " " 2.7Ω
R19,88▲★○□	J01245100	" " " TJ 10Ω
R17○□,25○□,86○□	J02245100	" " " SJ 10Ω
R28,31,37,49,58, 67,86▲,96○□	J02245101	" " " " 100Ω
R48,57,66,69,71, 99▲★○□,101	J01245101	" " " TJ 100Ω
R18,87▲★○□	J02245151	" " " SJ 150Ω
R97▲	J02245181	" " " " 180Ω
R47,56,65,73▲, 74▲,96★	J02245221	" " " " 220Ω
R97★,73★	J02245331	" " " " 330Ω
R96▲	J02245391	" " " " 390Ω
R29,97○□	J02245471	" " " " 470Ω
R40,72	J02245561	" " " " 560Ω
R3,4,6,8,9,11,44, 53,62,74★, 75▲★○□,76▲★○□, 78▲★○□,80▲★○□, 81▲★○□	J02245102	" " " " 1kΩ
R12,42,51●▲★, 60●▲★○□	J01245102	" " " TJ 1kΩ
R1,2,73○□,74○□	J02245122	" " " SJ 1.2kΩ
R51■○□,60■,42○□	J01245222	" " " TJ 2.2kΩ
R22,91○□	J02245332	" " " SJ 3.3kΩ
R27,95▲★○□,98★	J02245392	" " " " 3.9kΩ
R13,30■○□,43,45, 52,54,61,63, 98★○□,83○□	J02245472	" " " " 4.7kΩ
R33	J02245562	" " " " 5.6kΩ
R30●▲★,91▲★	J02245682	" " " " 6.8kΩ
R5,7,14,16,23,34, 38,46,55,64,68, 70,79▲★○□,83▲★, 77○□,92○□, 100○□	J02245103	" " " SJ 10kΩ
R41,50,59, 84▲★○□,85▲★○□, 92▲★,100▲★	J01245103	" " " TJ 10kΩ
R26,94▲★○□	J01245273	" " " TJ 27kΩ
R20,24,82▲★○□, 89▲★○□,90▲★○□, 93▲★○□	J01245104	" " " " 100kΩ
R10,21,32,35,36	J02245104	" " " SJ 100kΩ
		POTENTIOMETER
VR1	J62800060	K16BA0058-100KBx2 100KΩBx2
		CAPACITOR
C23,96▲★○	K00179001	Ceramic disc 50WV 0.5pF (DD104SL0R5C50V02)
C33	K00172010	" " " 1pF (DD104SL010C50V02)

C44,54,64	K00179005	Ceramic disc 50WV 20pF (DD104SL200J50V02)
C13,26,87▲★○, 99▲★○	K10176101	" " " 100pF (DD104-B101K50V02)
C1,2,78▲★○□, 79▲★○□	K10176181	" " " 180pF (DD104-B181K50V02)
C3–12,15–22,24, 25,27–31,34,39, 43,45,47–49,53, 55,57–59,63,65, 67–71,105,106, 107●	K10176102	" " " 0.001μF (DD104-B102K50V02)
(MODEL B▲,D★, E○,F□ C80–86,88, 90–95,97,98, 100–104)		
C107○□,108○□		
C32,35,36,72–74	K14180103	" " 63WV 0.01μF (RD871-1FZ103Z63V)
C38,75–77	K13170473	" " 50WV 0.047μF (DB207YF473Z5L5)
C37	K40129004	Electrolytic 16WV 10μF (RL16V10)
		TUNING CAPACITOR
● MODEL A		
C66	K00179004	Cermic disc 50WV 16pF (DD104SL160K50V02)
C42,52,56,62	K00179005	" " " 20pF (DD104SL200K50V02)
C46,60,61	K00179006	" " " 24pF (DD104SL240K50V02)
C50,51	K00175270	" " " 27pF (DD104SL270K50V02)
C40,41	K00179008	" " " 36pF (DD104SL360K50V02)
▲ MODEL B		
C56	K00179004	Ceramic disc 50WV 16pF (DD104SL160K50V02)
C42,52,62	K00179005	" " " 20pF (DD104SL200K50V02)
C46,50,51	K00179006	" " " 24pF (DD104SL240K50V02)
C40,41,66	K00179008	" " " 36pF (DD104SL360K50V02)
C60,61	K00179012	" " " 75pF (DD104SL750K50V02)
■ MODEL C		
C66	K00173100	Ceramic disc 50WV 10pF (DD104SL101K50V02)
C56	K00179003	" " " 13pF (DD104SL130K50V02)
C60,61	K00175150	" " " 15pF (DD104SL150K50V02)
C46,50,51	K00179004	" " " 16pF (DD104SL160K50V02)
C42,52	K00179005	" " " 20pF (DD104SL200K50V02)
C40,41	K00179006	" " " 24pF (DD104SL240K50V02)

● MODEL A, ▲ MODEL B, ■ MODEL C, ★ MODEL D, ○ MODEL E, □ MODEL F

★ MODEL D		
C66	K00175120	Ceramic disc 50WV 12pF (DD104SL120K50V02)
C60,61	K00175150	" " " 15pF (DD104SL150K50V02)
C56	K00179004	" " " 16pF (DD104SL160K50V02)
C42,52,62	K00179005	" " " 20pF (DD104SL200K50V02)
C46,50,51	K00179006	" " " 24pF (DD104SL240K50V02)
C40,41	K00179008	" " " 36pF (DD104SL360K50V02)
○ MODEL E		
C56	K00179003	Ceramic disc 50WV 13pF (DD104SL130K50V02)
C46,50,51	K00179004	" " " 16pF (DD104SL160K50V02)
C42,52,62	K00179005	" " " 20pF (DD104SL200K50V02)
C40,41,66	K00179006	" " " 24pF (DD104SL240K50V02)
C60,61	K00179008	" " " 36pF (DD104SL360K50V02)
□ MODEL F		
C56	K00173100	Ceramic disc 50WV 10pF (DD104SL100K50V02)
C46	K00179003	" " " 13pF (DD104SL130K50V02)
C50,51	K00175150	" " " 15pF (DD104SL150K50V02)
C40,41	K00179004	" " " 16pF (DD104SL160K50V02)
C42,52,62	K00179005	" " " 20pF (DD104SL200K50V02)
C60,61	K00179008	" " " 36pF (DD104SL360K50V02)
		TRIMMER CAPACITOR
TC1-5,9▲★○□, 10▲★○□,11▲★○□	K91000085	CTZ51C122 10pF
TC6-8	K91000086	CTZ51E117 20pF
		INDUCTOR
L1,14■□○,18■, 22▲★○□,10○□	L1190113	FL3H-R22M 0.22μH
L10,14●▲★,18●□○	L1190109	FL3H-R33M 0.33μH
L5,8,12,16, 26▲★○□	L1190020	FL5H-151K 150μH
L20,21	L1190017	FL5H-102K 1mH
L18▲	L1190011	FL4H-4R7K 4.7μH
L18	L1190007	FL4H-1R8 1.8μH
L2○□	L0021067	
L3●▲★,4○□	L0021068	
L3■□○	L0021083	
L6●▲★,7●▲★	L0021079A	
L6■□○,7■□○	L0021145	
L9□○,13○□,17●■○□	L0021071	
L17▲★	L0021077	
L11○□,15○□, 19●■○□	L0021072	
L19▲★	L0021078	
L23▲	L0021073	
L23★	L0021075	
L24▲,25▲	L0021074	
L24★,25★	L0021076	
L23○□	L0021146	
L24○□,25○□	L0021147	
		SWITCH
S1	N4090048	SUF31
S2	N0190086	SUB1024N
		CONNECTOR
J1	Q9000122	UG0033
J2,3,4▲★○□	P1090194	MBR06B
		CONNECTION CABLE
P1 (with wire)	T9204284	(5P DIN PLUG)
		KNOB
	R3065270	FT-16PNAK (FUNCTION)
	R3068620	FT-16PK (RF)
	R3071750	FT-16PDSB (IF)
	R3056500	PUSH KNOB

● MODEL A, ▲ MODEL B, ■ MODEL C, ★ MODEL D, ○ MODEL E, □ MODEL F

PARTS LAYOUT PLL UNIT(PB-2170)

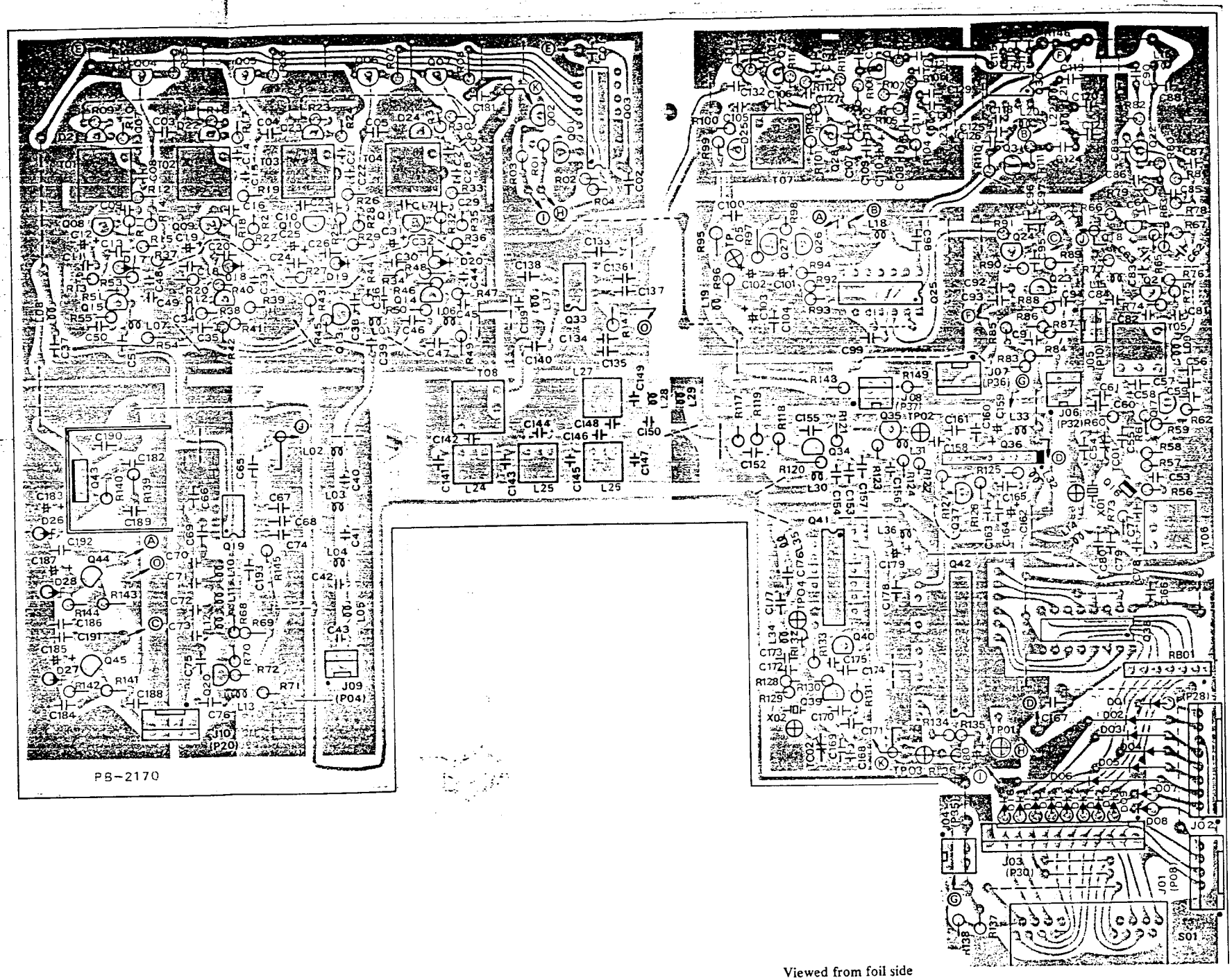

Viewed from foil side

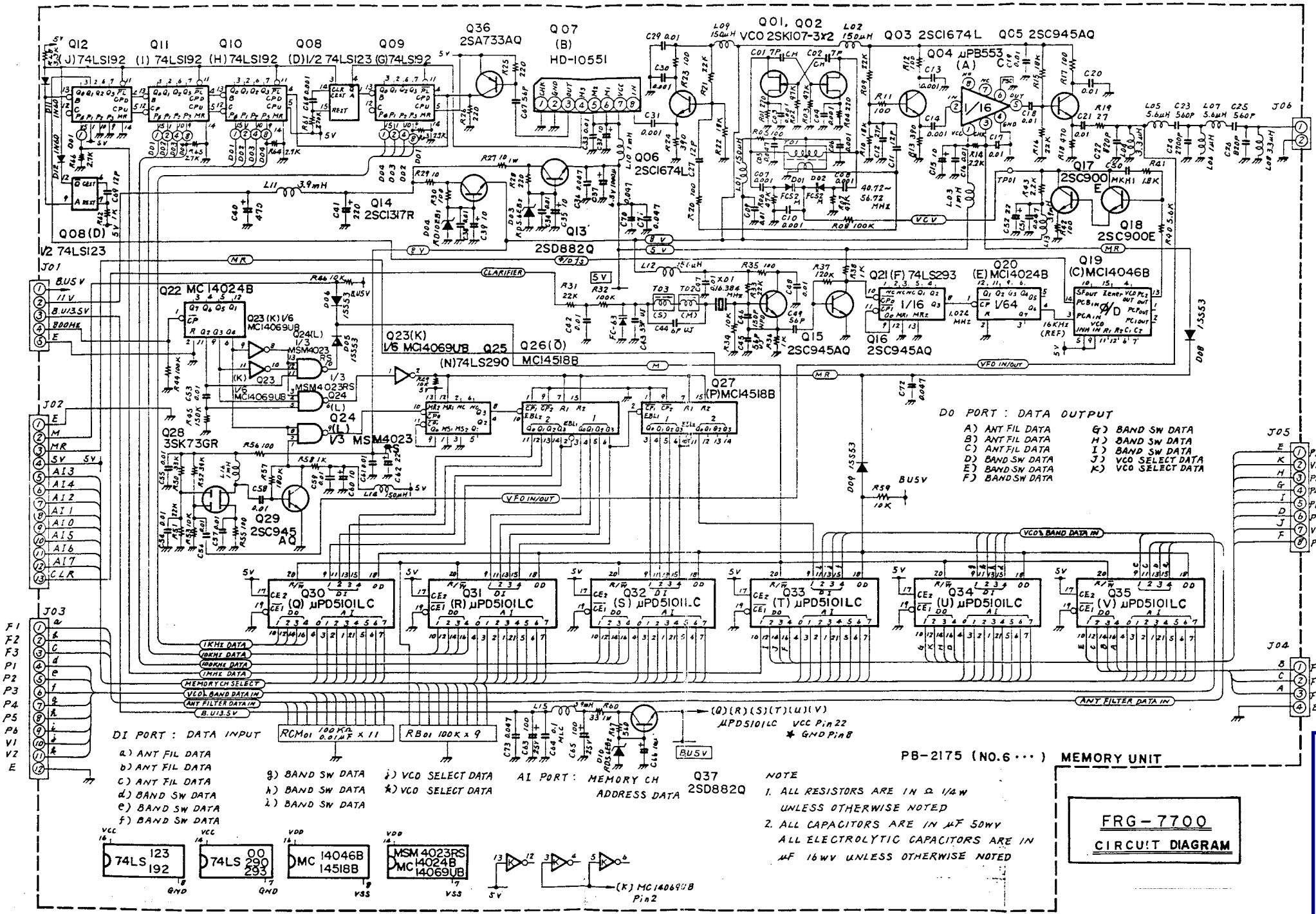

FRG-7700
CIRCUIT DIAGRAM

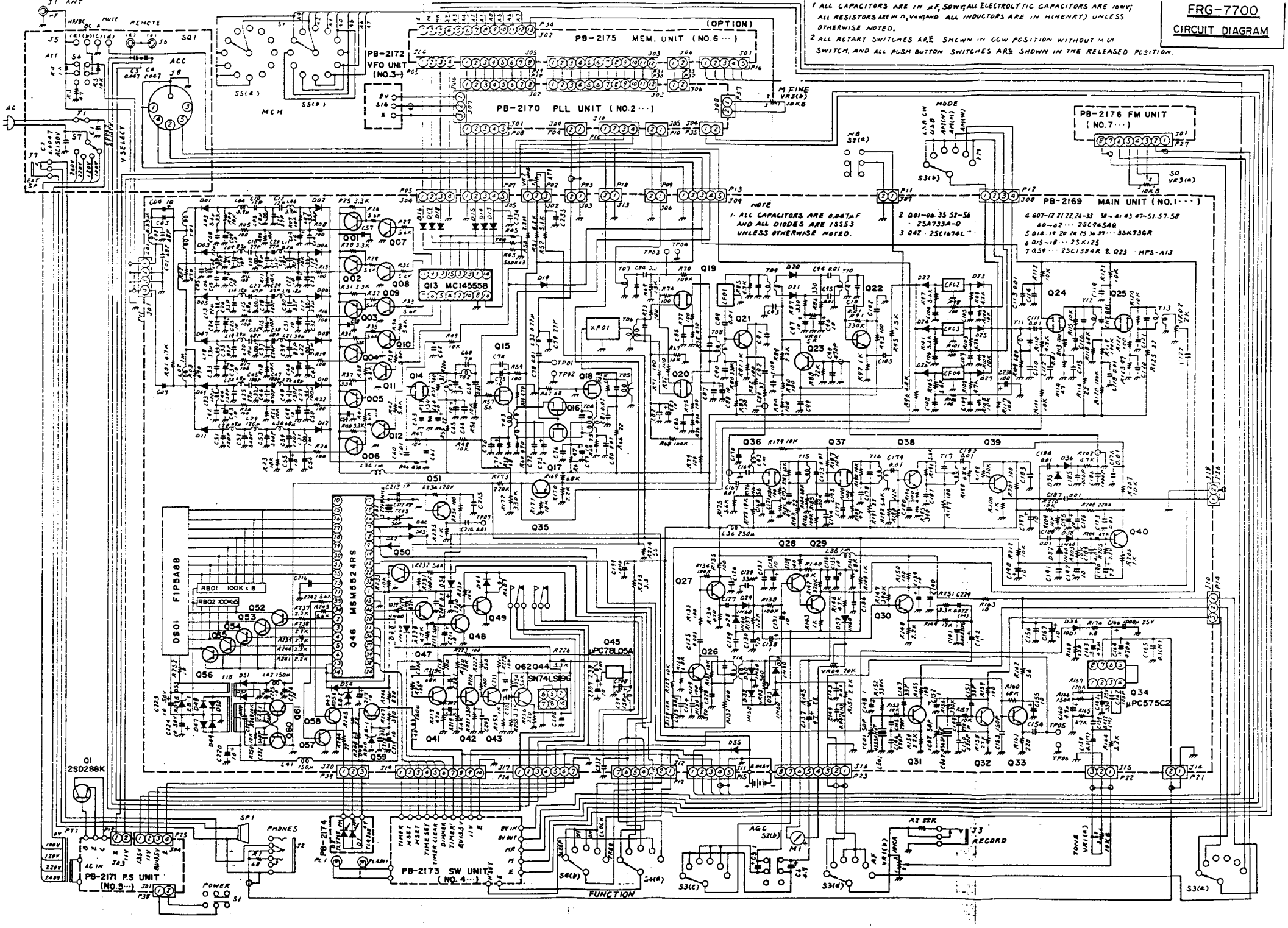

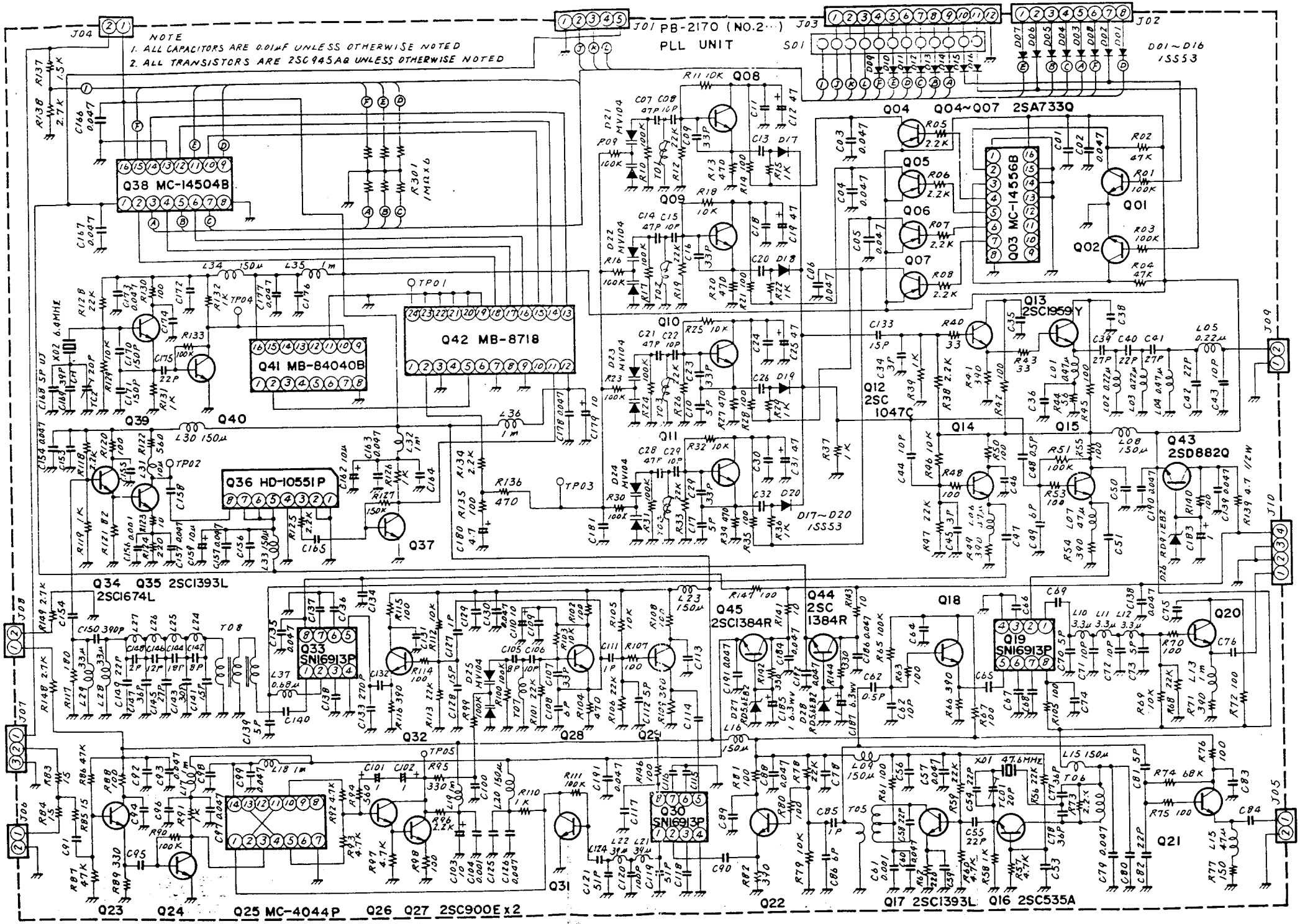
NOTE
1. ALL CAPACITORS ARE 0.01μF UNLESS OTHERWISE NOTED
2. ALL TRANSISTORS ARE 2SC945AQ UNLESS OTHERWISE NOTED
J01 PB-2170 (NO.2···)
PLL UNIT
J02
J03
J04
J05
J06
J07
J08
J09
J10
S01
D01~D16
1SS53
Q38 MC-14504B
Q03 MC-14556B
Q42 MB-8718
Q41 MB-84040B
Q36 HD-10551P
Q33 SN16913P
Q30 SN16913P
Q19 SN16913P
Q04~Q07 2SA733Q
Q13 2SC1959Y
Q12 2SC 1047C
Q43 2SD882Q
Q44 2SC 1384R
Q45 2SC1384R
Q34 Q35 2SC1674L
Q25 MC-4044P
Q26 Q27 2SC900E x2
Q17 2SC1393L
Q16 2SC535A
D17~D20
1SS53
TP01
TP02
TP03
TP04
TP05
X01 47.6MHz
X02 6.4MHz

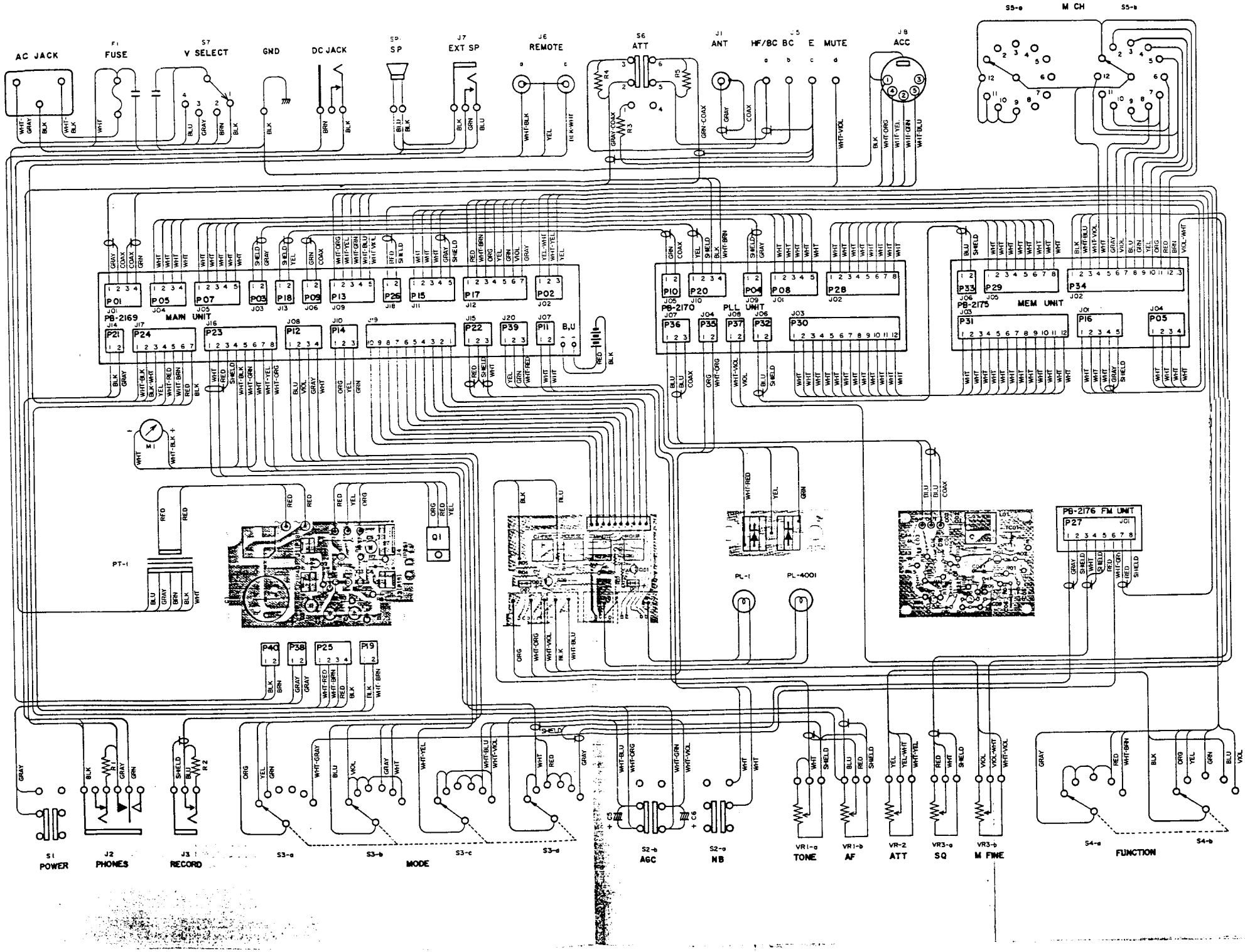
AC JACK
FUSE
V SELECT
GND
DC JACK
SP
EXT SP
REMOTE
ATT
ANT
HF/BC BC
E MUTE
ACC
M CH
MAIN UNIT
PB-2169
PB-2170
PLL UNIT
PB-2175
MEM UNIT
PB-2176 FM UNIT
PL-1
PL-4001
POWER
PHONES
RECORD
MODE
AGC
NB
TONE
AF
ATT
SQ
M FINE
FUNCTION

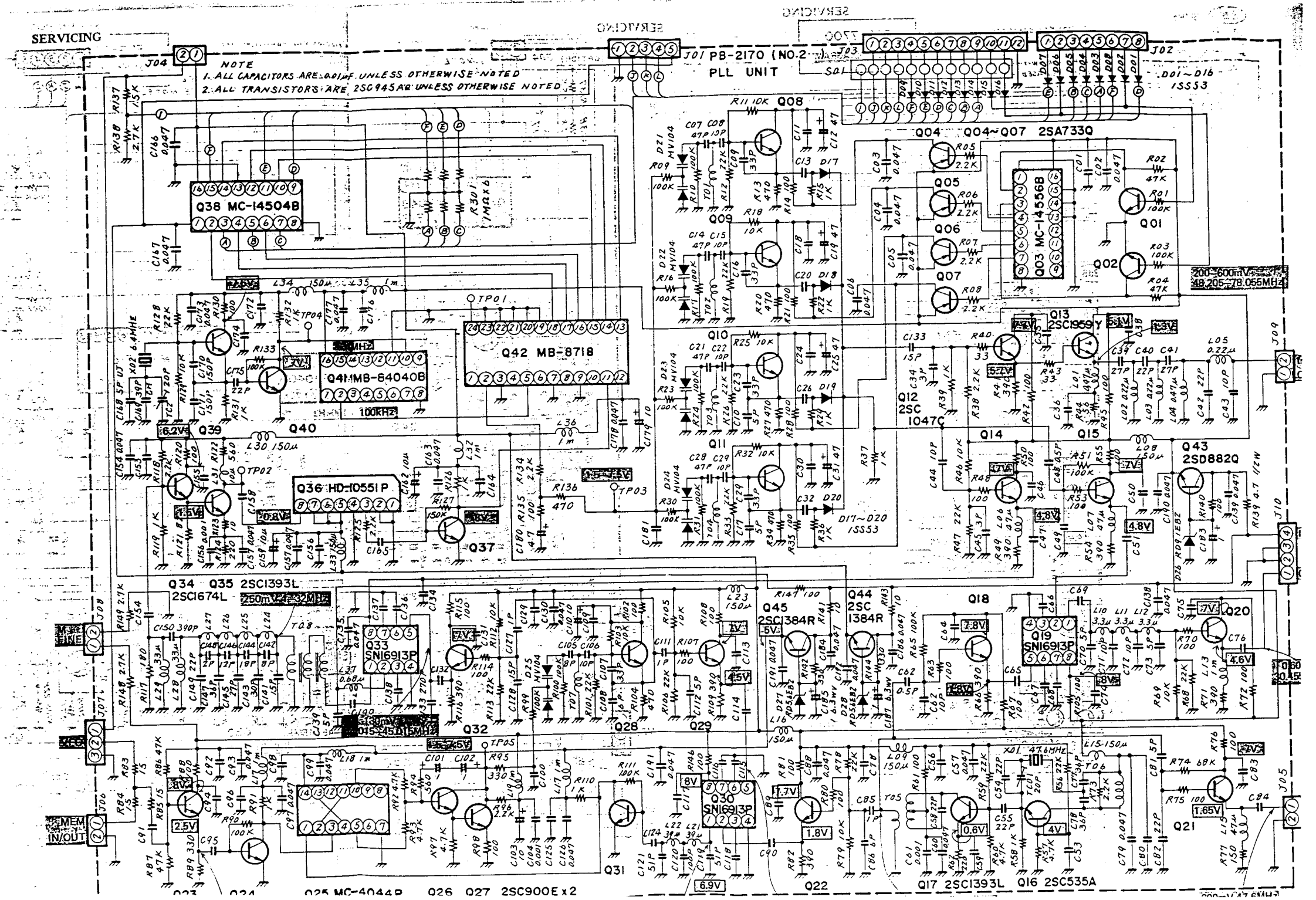
NOTE
1. ALL CAPACITORS ARE 0.01μF UNLESS OTHERWISE NOTED
2. ALL TRANSISTORS ARE 2SC945A UNLESS OTHERWISE NOTED
J01 PB-2170 (NO.2)
PLL UNIT
J02
J03
J04
J05
J06
J07
J08
J09
J10
D01~D16
1SS53
Q38 MC-14504B
Q03 MC-14556B
Q42 MB-8718
Q41 MB-84040B
Q36 HD-10551P
Q04~Q07 2SA733Q
Q13 2SC1959Y
Q12 2SC 1047C
Q43 2SD882Q
Q34 Q35 2SC1393L
2SC1674L
Q44 2SC 1384R
Q45 2SC1384R
Q33 SN16913P
Q19 SN16913P
Q30 SN16913P
Q25 MC-4044P
Q26 Q27 2SC900E x2
Q17 2SC1393L
Q16 2SC535A
D17~D20
1SS53
MEM IN/OUT
200~600mV
48.205~78.055MHz
250mV
32MHz
100KHz
6.4MHz
4.76MHz

REAR PANEL REMOVAL

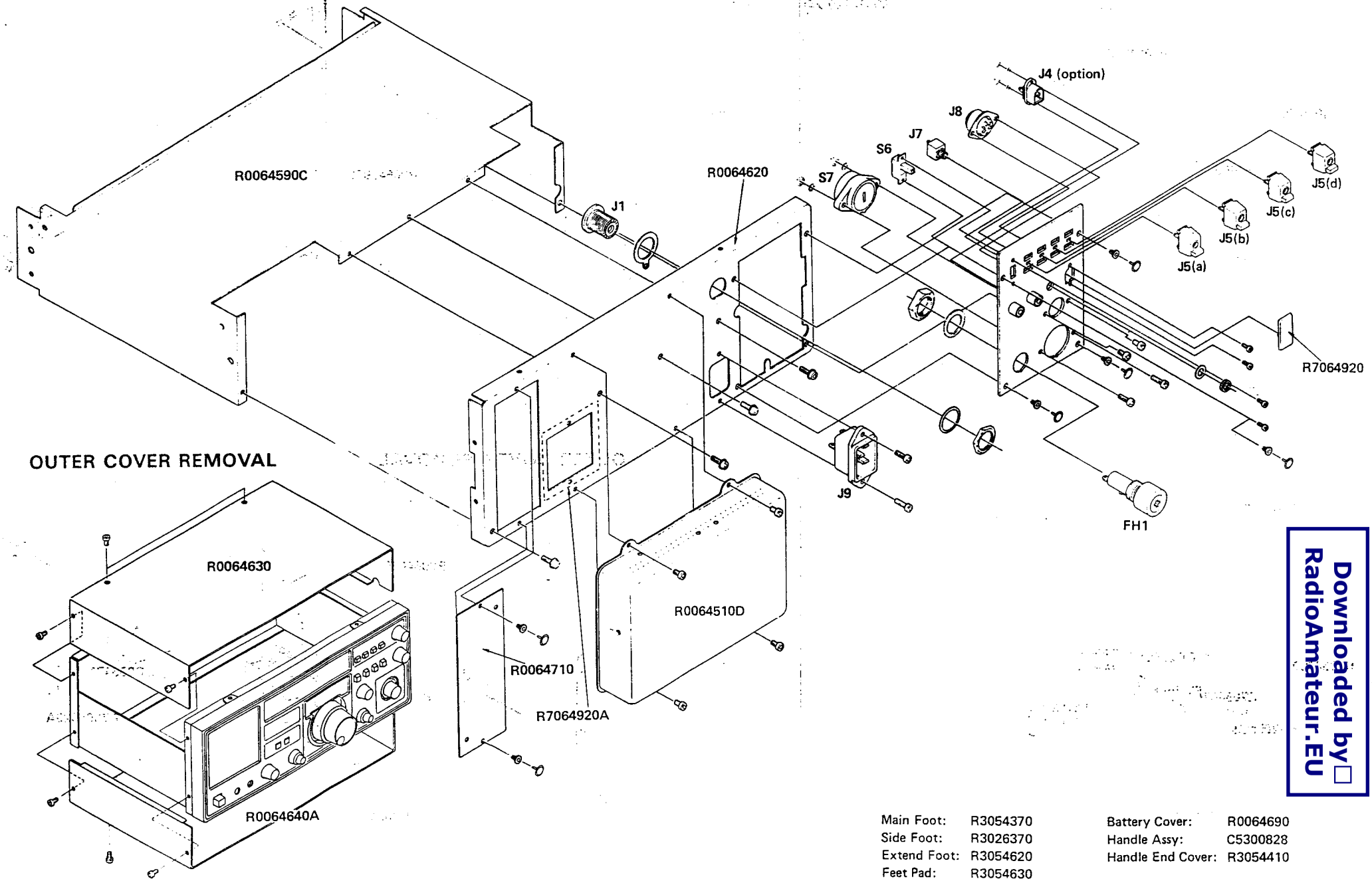

Main Foot:	R3054370	Battery Cover:	R0064690
Side Foot:	R3026370	Handle Assy:	C5300828
Extend Foot:	R3054620	Handle End Cover:	R3054410
Feet Pad:	R3054630		

PARTS LAYOUT M

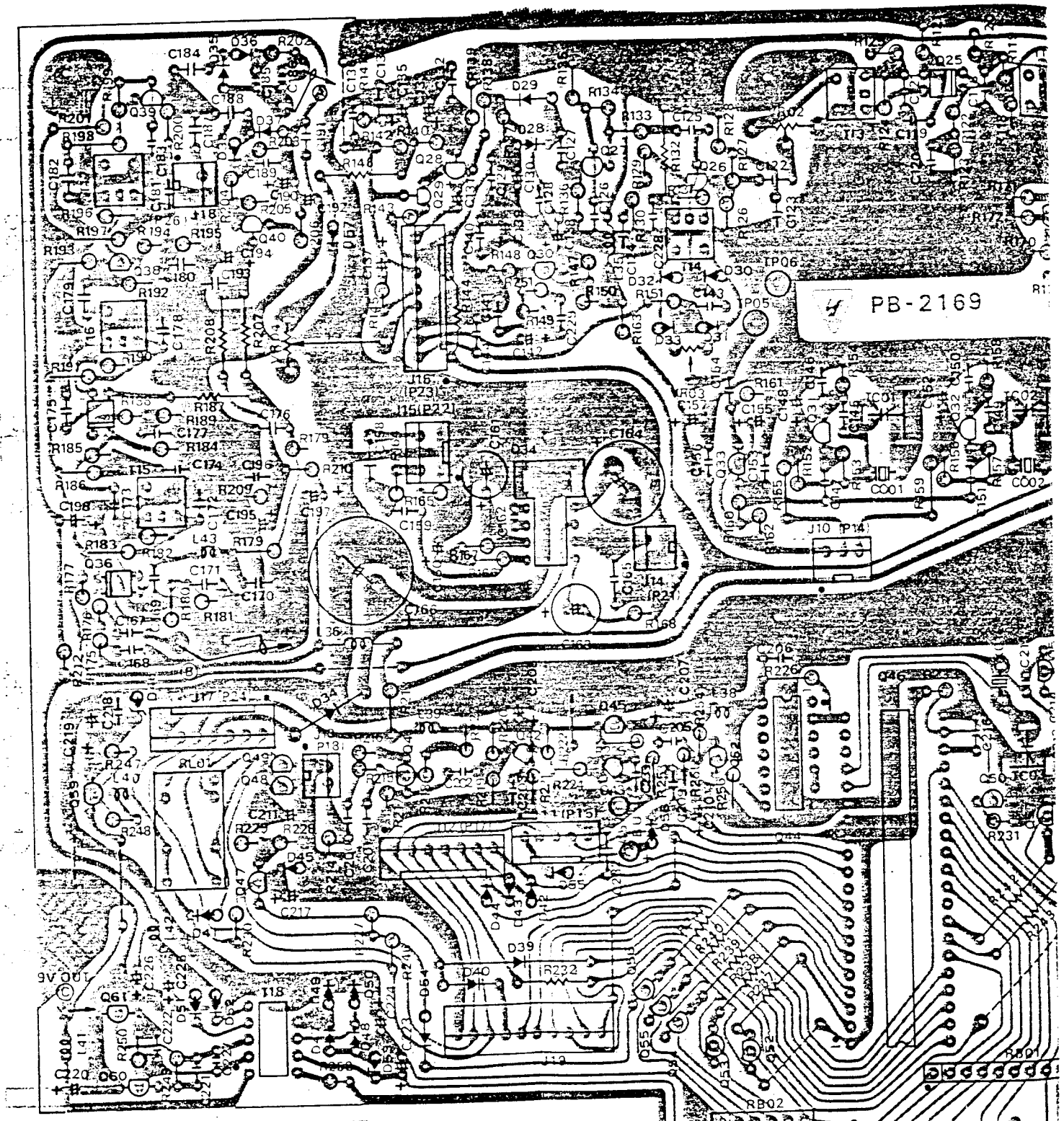

Should the need for replacement of relays become necessary, or if you are trying to verify proper relay operation, these diagrams should help you.

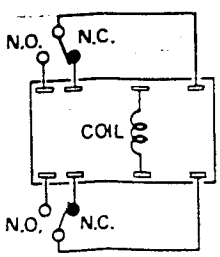

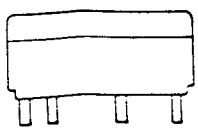

RL1001

PARTS LAYOUT MAIN UNIT(PB-2169)

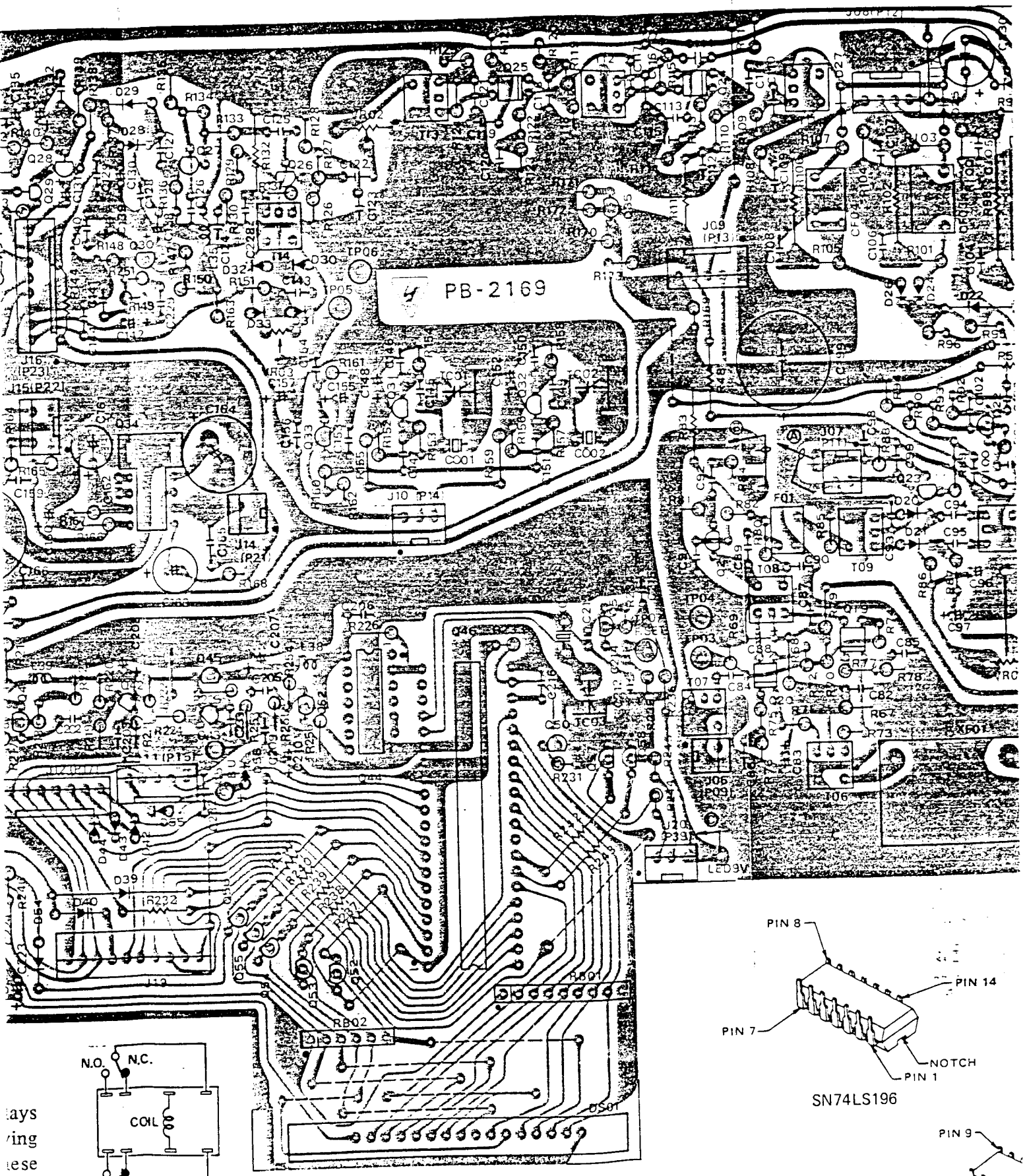

SN74LS196

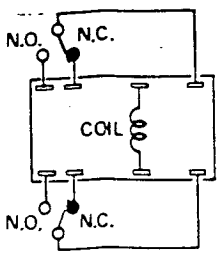

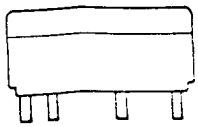

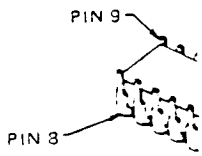

MC14553

IAIN UNIT(PB-2169)

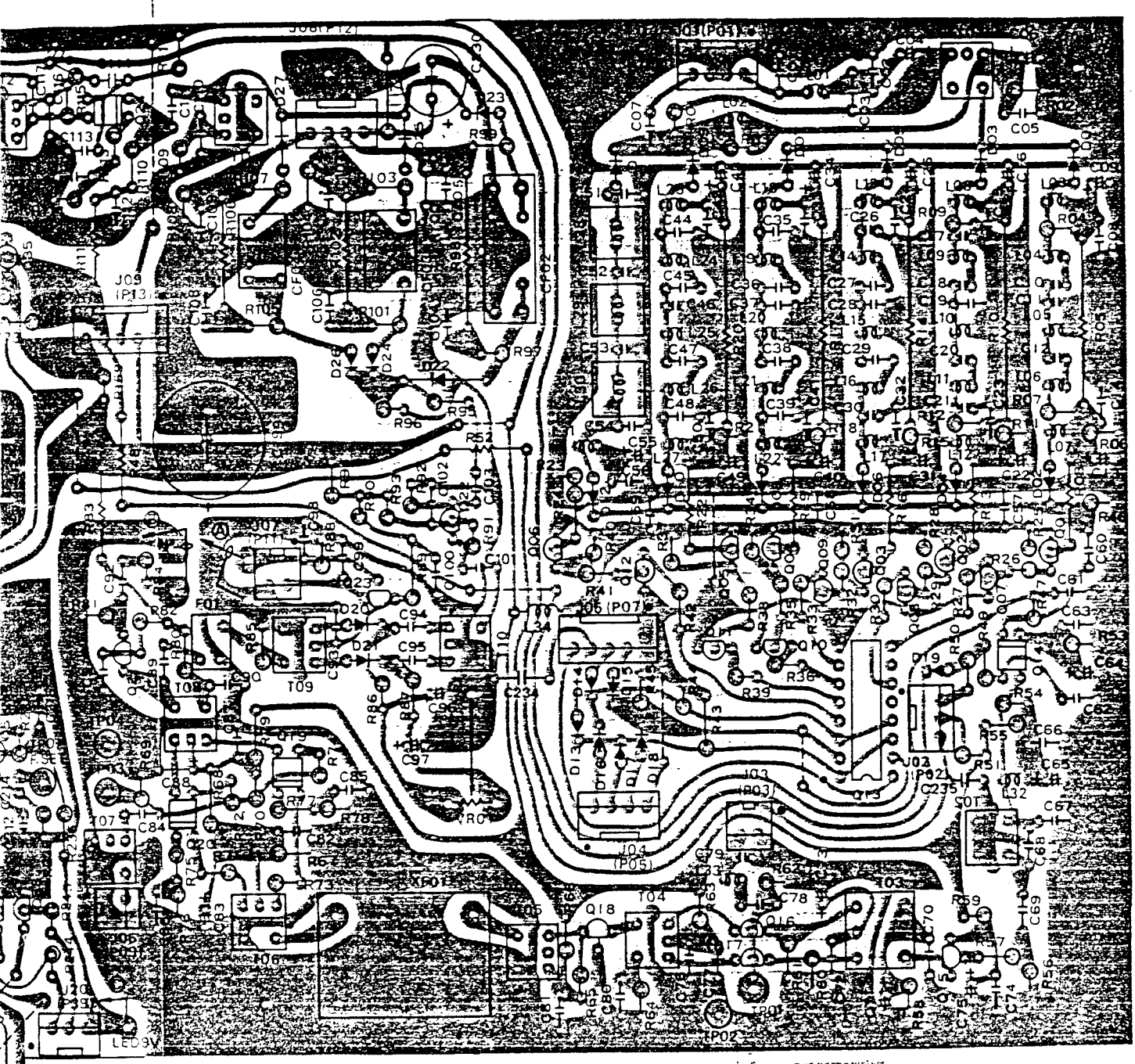

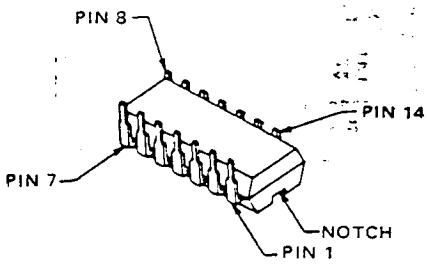

SN74LS196

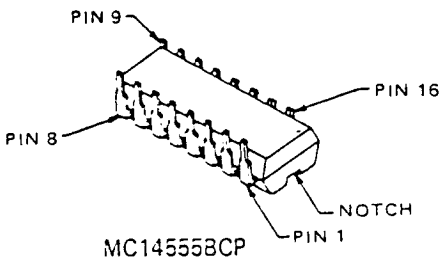

MC145558CP

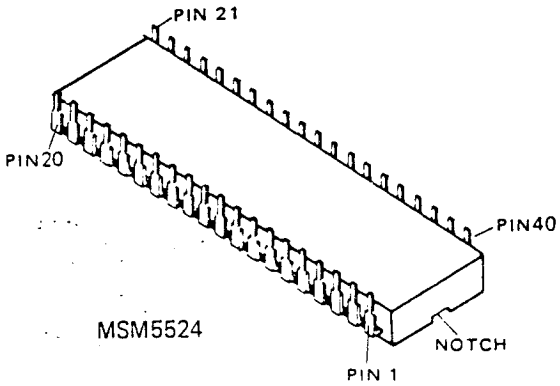

MSM5524